Electrolux PROFESSIONAL

Warewashing
Undercounter, pressure boiler, single skin, drain pump & rinse aid dispenser, 540d/h

ITEM #

MODEL #

NAME #

SIS #

AIA #



400204 (EL1P) Undercounter Dishwasher with pressure boiler, single skin, built-in drain pump and rinse aid dispenser, 1 phase, 540d/h

Short Form Specification

Item No.

Unit shall be Electrolux Professional Undercounter dishwasher type hot water rinsing using rack dimension of 500*500mm. Electrical characteristics to be 230 volts single phase 50Hz operation. Washing performance is ensure by a powerful wash pump, large capacity wash tank, upper and lower revolving spray arms. Soft start wash pump to avoid accidental breakage of crystal wares. Rinse temperature and pressure guaranteed by built in pressure boiler. Uses 3 liters of clean water per final rinse. Two automatic cycles for different types of wares. Double skin insulated door. 304 AISI stainless steel construction to include door, external panels, frame and wash tank. Electronic control with temperature display. Automatic self-cleaning cycle. The unit shall include drain pump and rinse aid dispenser pump and is equipped with electric cable.

APPROVAL:

Main Features

- Fully automatic self-cleaning cycle avoids the risk of bacteria proliferation.
- State-of-the-art electronic controls with built-in programming, self-diagnostics for serviceability and automatic interior self-cleaning cycle.
- 4 second (variable) pause after washing and before rinsing ensures that no drops of unclean water will fall on the clean items at the end of the rinsing cycle.
- An effective rinse system uses only 3 liters of clean hot water per basket for lower running costs.
- Incorporated Soft Start feature to offer additional protection to more delicate items.
- Built-in pressure boiler sized to raise incoming 50 ° C water to guarantee a minimum rinsing temperature of 82 °C for sanitizing rinse. No external booster is required.
- Built-in rinse aid dispenser with automatic initial and continuous cycle loading for perfect result while minimizing service and maintenance needs.
- Digital read-out keeps operator informed as to temperatures.
- IPx4 water protection.
- Unique temperature interlock guarantees required temperatures in both the wash and final rinse.
- Washing system endowed with rotating washing arms, high powered wash pump and large capacity boiler for professional washing.
- Simple control panel with digital display allows on-site personalization of washing and rinsing cycle times and temperatures as well as precise rinse aid and detergent quantities to suit customer's needs.
- Simple service from the front.
- Pre-arranged to accept external dispensers.
- Pre-arrangement for HACCP system implementation and Energy Management device.
- Washing capacity of 30 baskets or 540 dishes per hour.

Construction

- Unit to feature smooth surfaces to facilitate cleaning.
- Incorporated drain pump to control water level in wash tank draining.
- Element protection from dry fire and low water.
- Interchangeable wash/rinse arms screw out for simple clean up.
- The boiler drain facilitates the evacuation of stagnant water after long periods of inactivity to ensure a higher level of hygiene.
- Double skin insulated door to reduce heat dispersion.
- Front and side panels, door and wash tank made in heavy duty anti-corrosive AISI 304 stainless steel.
- 304 stainless steel boiler with higher welding protection to increase resistance to corrosion.
- PVC water supply hose with metal connections resistant to high water pressure.

Electrolux PROFESSIONAL

Warewashing
Undercounter, pressure boiler, single skin, drain pump & rinse aid dispenser, 540d/h

- Completely closed on the back by a cover plate.
- Large wash tank with round corners and no pipes to avoid dirt built-up.
- Single phase electrical connection.
- Unit to include drain pump and rinse aid dispenser pump.

Included Accessories

• 1 of Yellow cutlery container	PNC 864242
• 1 of Basket for 18 dinner plates - yellow	PNC 867002

Optional Accessories

• 12lt external manual water softener	PNC 860412 ❑
• 8lt external automatic water softener	PNC 860413 ❑
• Stand for undercounter dishwasher	PNC 860418 ❑
• 20lt external manual water softener	PNC 860430 ❑
• Integrated HACCP kit	PNC 864001 ❑
• External detergent level probe kit	PNC 864004 ❑
• External rinse aid level probe kit	PNC 864005 ❑
• KIT 4 FLANGED FEET (MARINE FEET) FOR UC DW	PNC 864009 ❑
• Stainless steel inlet hose kit	PNC 864016 ❑
• Filter for partial demineralization	PNC 864017 ❑
• Kit to measure total and partial water hardness	PNC 864050 ❑
• Rinse booster pump kit for single tank pressure dishwasher	PNC 864051 ❑
• Detergent dosing kit	PNC 864218 ❑
• Stainless steel tank filter for single skin undercounter	PNC 864222 ❑
• Yellow cutlery container	PNC 864242 ❑
• Filter for total demineralization	PNC 864367 ❑
• Pressure reducer for single tank dishwasher	PNC 864461 ❑
• Half size basket universal	PNC 864527 ❑
• Half size basket for plates	PNC 864528 ❑
• Half size basket for glasses	PNC 864529 ❑
• Kit 4 plastic boxes for cutlery - yellow	PNC 865574 ❑
• Basket for 18 dinner plates - yellow	PNC 867002 ❑
• Basket for 48 small cups or 24 cups - blue	PNC 867007 ❑
• Cover rack for small and light items (500x500 baskets)	PNC 867016 ❑
• Basket for 16 vertical glasses (h 70 mm - diam 100 mm) - blue	PNC 867023 ❑

The company reserves the right to make modifications to the products without prior notice. All information correct at time of printing.

Electrolux PROFESSIONAL

Warewashing
Undercounter, pressure boiler, single skin, drain pump & rinse aid dispenser, 540d/h

Front

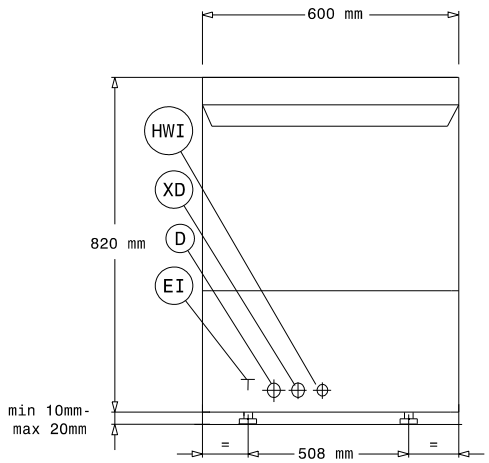

Side

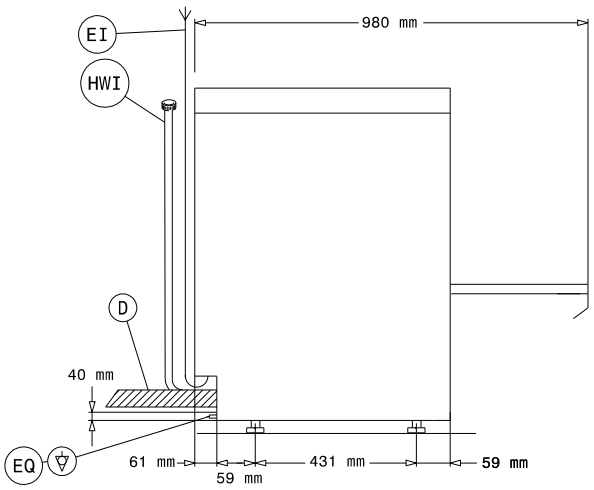

D = Drain
EI = Electrical inlet (power)
EO = Electrical Outlet
HWI = Hot water inlet
XR = Rinse aid connection

Top

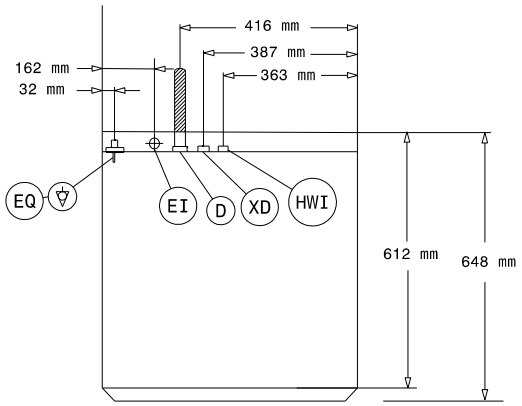

Electric

Supply voltage:	
400204 (EL1P)	230 V/1 ph/50 Hz
Default Installed Power:	3.65 kW
Boiler heating elements:	2,8 kW
Tank heating elements:	2 kW
Wash pump size:	0.736 kW

Water:

Pressure, bar min/max:	2-3 bar
Water supply temperature*:	50 °C
Drain line size:	20.5mm
Inlet Water supply pressure:	29 - 44 psi (2 - 3 bar)
Washing tank capacity (lt):	33
Water consumption per cycle (lt):	3
Boiler Capacity (lt):	5,8

Key Information:

Baskets per hour*:	30
Dishes per hour:	540
Working cycles time (sec.):	120/180
Wash temperature:	55-65°C
Cell dimensions - width:	500 mm
Cell dimensions - depth:	500 mm
Cell dimensions - height:	330 mm
Rinse temperature:	80-90 °C
External dimensions, Width:	600 mm
External dimensions, Height:	820 mm
External dimensions, Depth:	648 mm
Packaging size (WxDxH):	690x620x900 mm
Noise level:	<70 dBA

The company reserves the right to make modifications to the products without prior notice. All information correct at time of printing.

2021.02.09