BEZZERA

Dal 1901

OTTO

COD. 9942074

REV. 00 ed



TABLE 1A
OTTO DE/PM

POS	CODE	DESCRIPTION
1	5968136	ASSY TRAY
2	5261020	WIRED DISCHARGE GRID
3	5261004	WIRED CUPS GRID
4	7819901	SCREW TTEI M4X12 ISO 7380 A2 INOX
5	5094921SG	FRONTAL GROUP
6	7816002	SCREW TCEI M4X12 UNI 5931 A2
7	5058503LL	VOLUMETRIC COUNTER SUPPORT W/COMPASSES
8	5056358LW	CUPS-HEATER SLIDE
9	5076325LW	CUPS HEATER
10	5074683LW	CUPS-HEATER GRID
11	5074684LW	BACK CUPS-HEATER
12	5521512	BEZZERA LABEL
12	5521525	GOLDEN LABEL SNAKE MILANO ITALY
13	7809906	SCREWS POELIER M8X16 A2 AISI304
14	5011721LW-YE	WHITE BODY
14	5011721LW-VN	BLACK BODY
14	5011721LW-VX	RED BODY
14	5091732LW	STAINLESS STEEL BODY
15	5098407LL	BODY SUPPORT W/COMPASSES
16	5964749	ASSY FRAME
17	7474215	FEET

BEZZERA OTTO

TABLE 1A
OTTO DE/PM

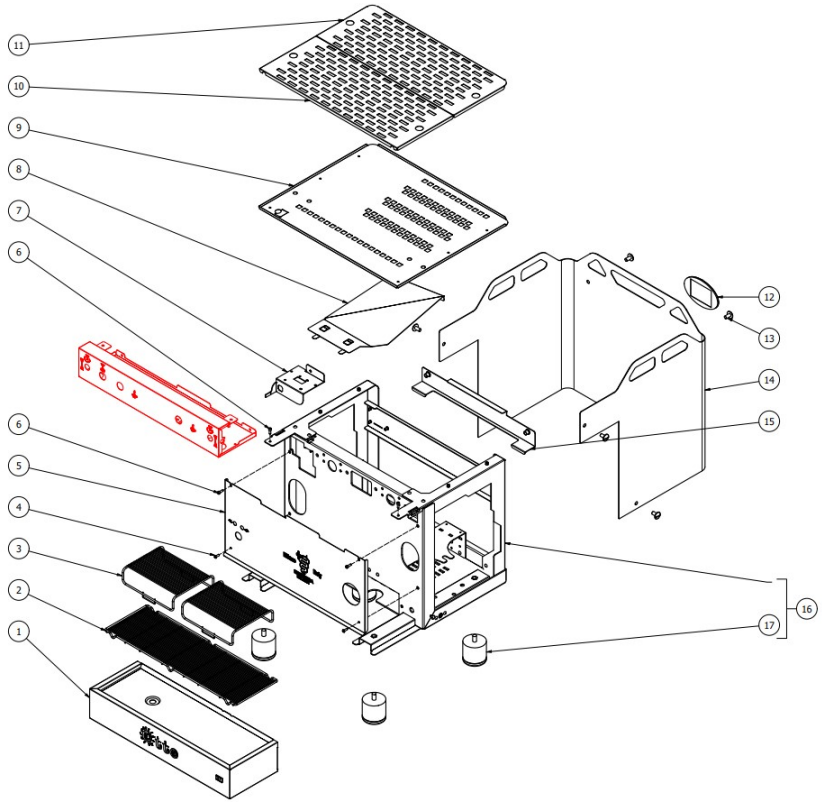

TABLE 1B
OTTO DE - With automatic steam

POS	CODE	DESCRIPTION
1	5968136	ASSY TRAY
2	5261020	WIRED DISCHARGE GRID
3	5261004	WIRED CUPS GRID
4	7819901	SCREW TTEI M4X12 ISO 7380 A2 INOX
5	5094921SG	FRONTAL GROUP
6	7816002	SCREW TCEI M4X12 UNI 5931 A2
7	5058503LL	VOLUMETRIC COUNTER SUPPORTW/COMPASSES
8	5056358LW	CUPS-HEATER SLIDE
9	5076325LW	CUPS-HEATER
10	5074683LW	CUPS-HEATER GRID
11	5074684LW	BACK CUPS-HEATER
12	5521512	BEZZERA LABEL
12	5521525	GOLDEN LABEL SNAKE MILANO ITALY
13	7809906	SCREWS POELIER M8X16 A2 AISI304
14	5011721LW-YE	WHITE BODY
14	5011721LW-VN	BLACK BODY
14	5011721LW-VX	RED BODY
14	5091732LW	STAINLESS STEEL BODY
15	5098407LL	BODY SUPPORT W/COMPASSES
16	5964750	ASSY FRAME
17	7474215	FEET

BEZZERA **OTTO**

TABLE 1B
OTTO DE - With automatic steam

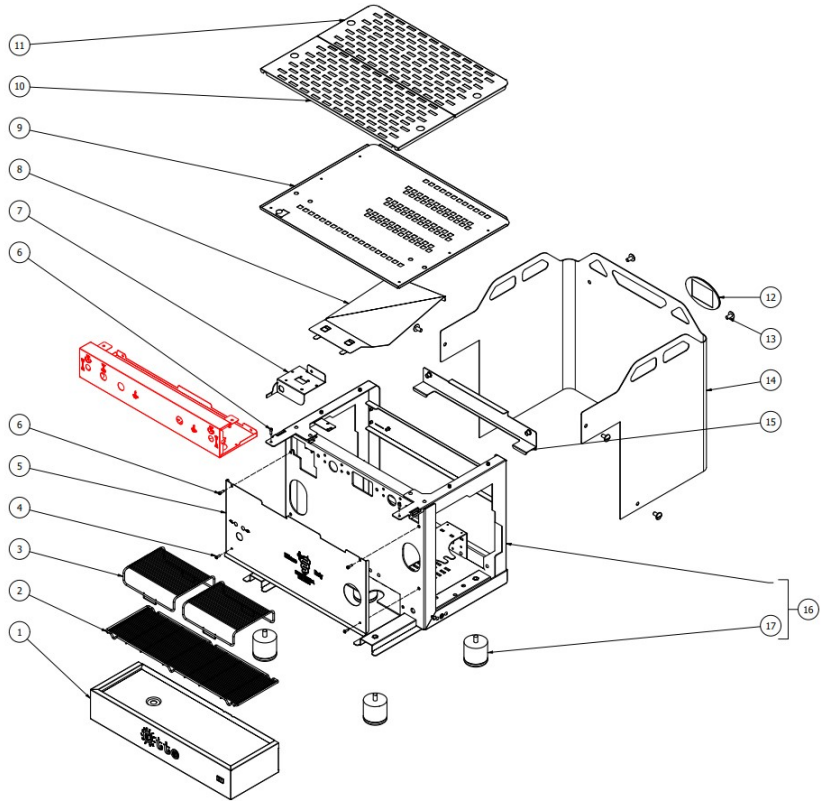

TABLE 2A
OTTO PM

POS	CODE	DESCRIPTION
1	5058479LL	STEAM TAP SUPPORT W/COMPASSES
2	7816002	SCREW TCEI M4X12 UNI 5931 A2
3	5094920SG	FRONTAL WORK PM
4	7809906	SCREWS POELIER M8X16 A2 AISI304
5	7819901	SCREW TTEI M4X12 ISO 7380 A2 INOX
6	7633355	SWITCH 110V
6	7633354	SWITCH 230V

BEZZERA **OTTO**

TABLE 2A
OTTO PM

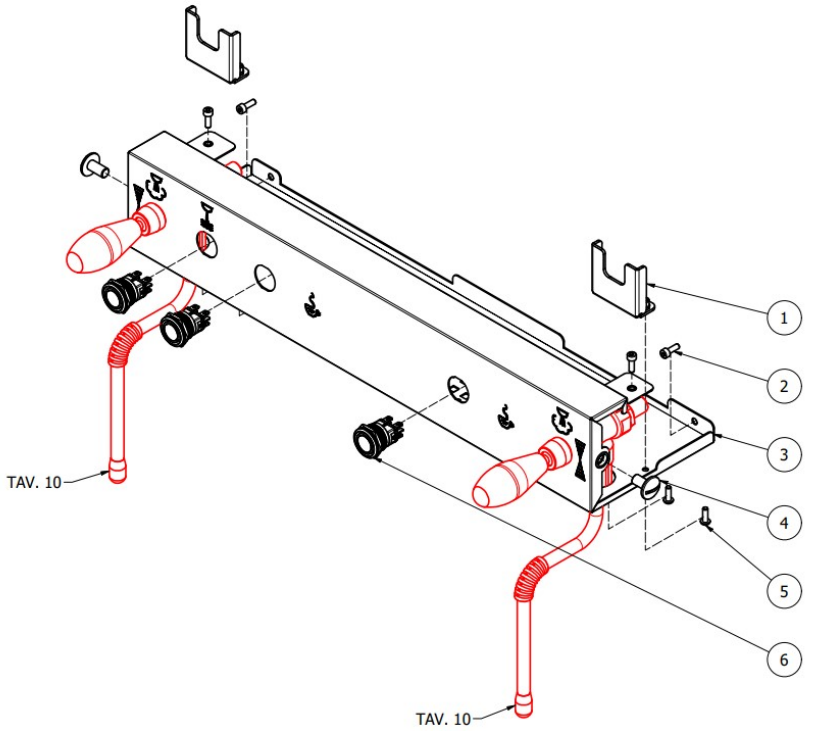

TABLE 2B
OTTO DE

POS	CODE	DESCRIPTION
1	7611517	CLAMP
2	5661501.01NX	BLACK 6 NYLON KEYS
3	5191511	SPACER
4	7665524.02PR	CARD KEYS.6KEYS 6LED WHITE PRESSURE(CARD ONLY KEYBOARD NOT INCLUDED)
5	5191506	SPACER D6X8.8
6	5058461LL	B2016 PUSHBUTTON SUPPORT
7	7809811	PLASTIC SCREW TCI M3X16 DIN85
8	7819908	SCREW TTEI M4X8
9	5058479LL	STEAM TAP SUPPORT W/COMPASSES
10	5094919SG	FRONTAL WORK DE
11	7819901	SCREW TTEI M4X12 ISO 7380 A2 INOX

BEZZERA OTTO

TABLE 2B
OTTO DE

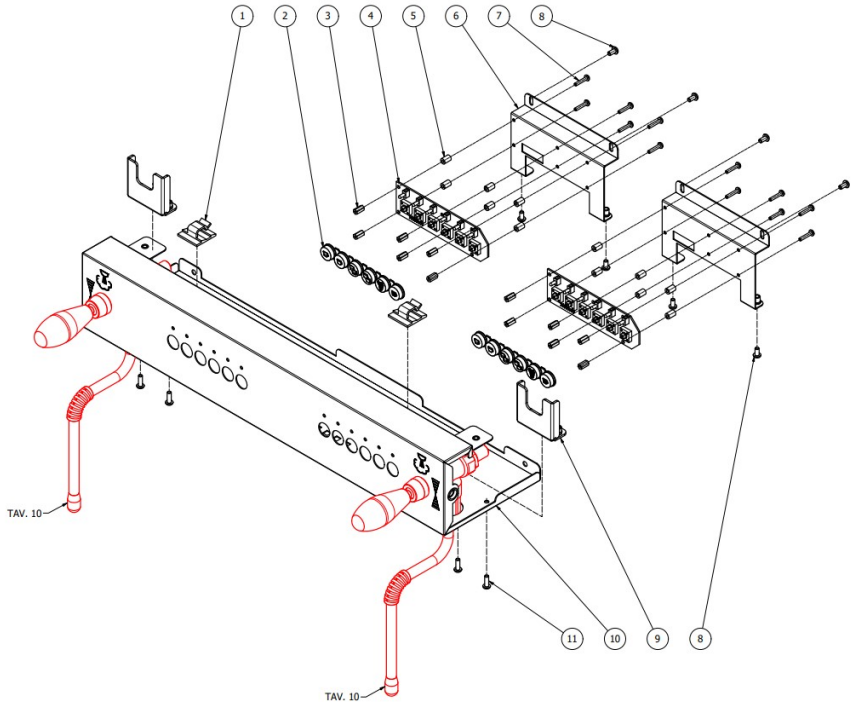

TABLE 2C
OTTO DE - With automatic steam

POS	CODE	DESCRIPTION
1	7611517	CLAMP
2	5661502.01NX	6 BLACK KEYS SERIES
3	5191511	SPACER
4	7665524.02PR	CARD KEYS.6KEYS 6LED WHITE PRESSURE(CARD ONLY KEYBOARD NOT INCLUDED)
5	5191506	SPACER D6X8.8
6	5058461LL	B2016 PUSHBUTTON SUPPORT
7	7809811	PLASTIC SCREW TCI M3X16 DIN85
8	7819908	SCREW TTEI M4X8
9	5058479LL	STEAM TAP SUPPORT W/COMPASSES
10	5094923SG	FRONTAL WORK DE
11	7819901	SCREW TTEI M4X12 ISO 7380 A2 INOX

BEZZERA OTTO

TABLE 2C
OTTO DE - With automatic steam

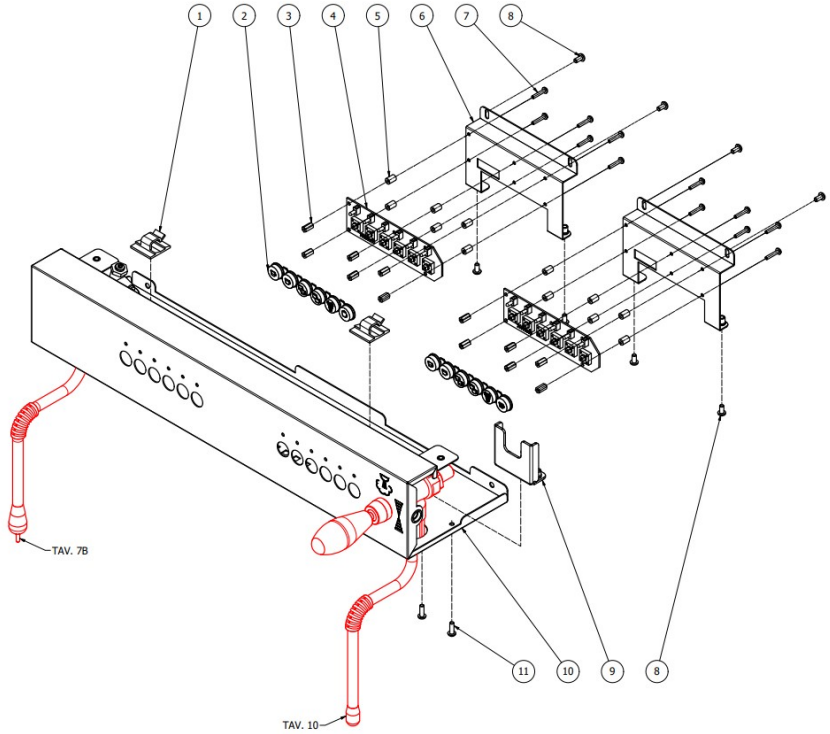

TABLE 3
OTTO DE/PM

POS	CODE	DESCRIPTION
1	7809903	SCREWS POLIERS M5X16 A4 AISI316
2	5470501	SHOWER D57 AISI 304
3	5285501AL	SHOWER-HOLDER D57 H7.5 OT60LF
4	7493008	CONICAL GASKET H9.3 NBR 90SH PEROS
5	5280502TW-AL	COUPLING RING DENICROMAL
6	7496004.01	GASKET OR 139 VITON FDA
7	5283520.02AL	CARTRIDGE FLANGE D60X14,5 OT60LF
8	5018460.01CT	SUPPORT COUPLING RING
9	7814002	NOTCHED WASHER D4
10	7816021	SCREW TCEI M5X25 UNI 5931 A2
11	5301504AL	ELBOW FITTING M12X1/8
12	7634808	THERMAL SAFETY DEVICE 250V 95°C
13	5162495LL	SOLENOID VALVE PIPE
14	5302004AL	FITTING M12X1/8
15	5302014AL	FITTING M13X1/8
16	5223003	JET M6 X 6 HOLE D0.8 OT
17	7702419R	SOLENOID VALVE ODE 3 WAYS 110/120V
17	7702418R	SOLENOID VALVE 3 WAYS ODE 230/240V 50/60HZ
18	5370313	GROUP E.VALVE DRAIN RUBBER HOLDER
19	7611516	CLAMP 10086
20	7816014	SCREW M8X20 UNI5931 A2
21	5963222	ASSY HEATING ELEMENT CARTRIDGE 110/120V
21	5963221.01	ASSY CARTRIDGE HEATING ELEMENT220/240V 100W

BEZZERA OTTO

TABLE 3
OTTO DE/PM

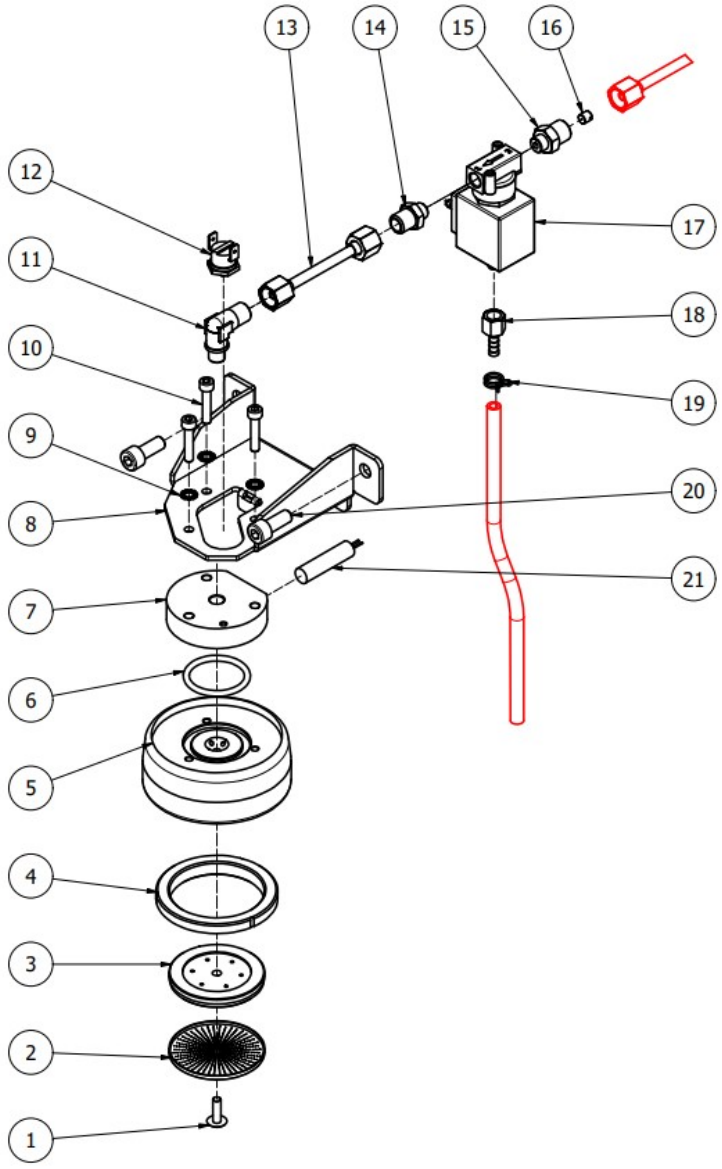

TABLE 4
OTTO DE/PM

POS	CODE	DESCRIPTION
1	7470601	VIBRATION-DAMPING D25X10
2	7812701	NUT M6 DIN6923 INOX A2
3	5058502LW	MOTOR SUPPORT
4	7814002	NOTCHED WASHER D4
5	7816027	SCREW TCEI M5X8 UNI5931 A2
6	7730506	ROTARY PUMP 100L/H PA104X
7	7496033	OR GASKET 2075 VITON
8	7374005	PROCON PUMP FILTER
9	5302057AL	FITTING 1/8
10	5221844	NUT 1/8
11	7304505TR	FITTING 3 WAYS 1/8
12	7304538TR	FITTING
13	7303044TR	FITTING 3/8
14	5302012.01AL	STRAIGHT FITTING 3/8
15	7730508	KIT PUMP 48YZ
16	7611508	PUMP CLAMP
17	7742404.03	ELECTRIC MOTOR 220/240V 6MF 50/60HZ
17	7741005.03	ELECTRIC MOTOR 110V 25MF 50/60HZ

BEZZERA OTTO

TABLE 4
OTTO DE/PM

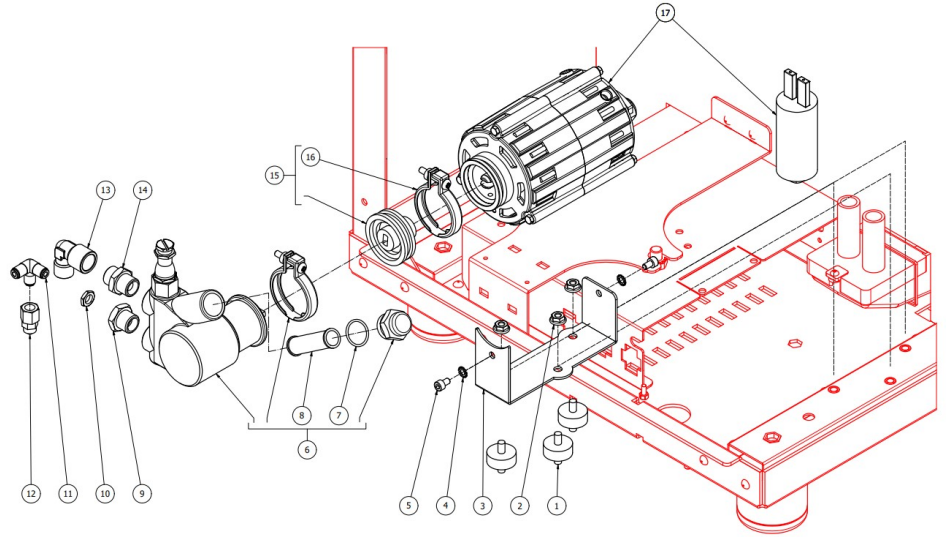

TABLE 5
OTTO DE/PM

POS	CODE	DESCRIPTION
1	5301506TR	UNION ELBOW M13X1/4
2	7304542TR	FITTING/CONIC TEE 1/8
3	5721130.01AL	HEATING ELEMENT 110V 1800W
3	5722252.01AL	HEATING ELEMENT 220/240V-2600/3050W
4	5492006	GASKET D76 X 39 X 2 ASBESTOS FREE
5	7615003	FASTON 45° HOLE D4.3
6	7814001	WASHER D4 DIN 6798A A2
7	7826212	SCREW TCI M4X6 UNI 6107 OT
8	5058478	SUPPORT COVER HEATING ELEMENT CONTACTS
9	7816423	SCREW TE M8X18 UNI5739 A2
10	5373109	COVER HEATING ELEMENT CONTACTS
11	5192314	SUCTION HOSE D6 L=180MM PTFE
12	5302075AL	FITTING M13-1/8"G
13	7304502TR	STRAIGHT FITTING 1/8
14	5329021DC-AL	EXCHANGER 2 HOLES L=235
15	5495007	COPPER GASKET D32X40
16	5973128LL	L/A PROBE COMPLETE
17	5321026BL	BOILER 2GR COMPACT
18	5192324	DRAW OUT D6X1 L=100 PTFE
19	5963047.01	ASSY CUP+O RING+VALVE PLUG
20	5965015.07	ASSY SECURITY VALVE 1,65 BAR VITON
21	7496094	O-RING GASKET 102 VITON 70SH
22	5264017.02	SECURITY VALVE PIN
23	5226417.01	SECURITY VALVE 1/8"G PLUG
24	9991029	BOILER COVER OTTO 690X245 SP10

BEZZERA **OTTO**

TABLE 5
OTTO DE/PM

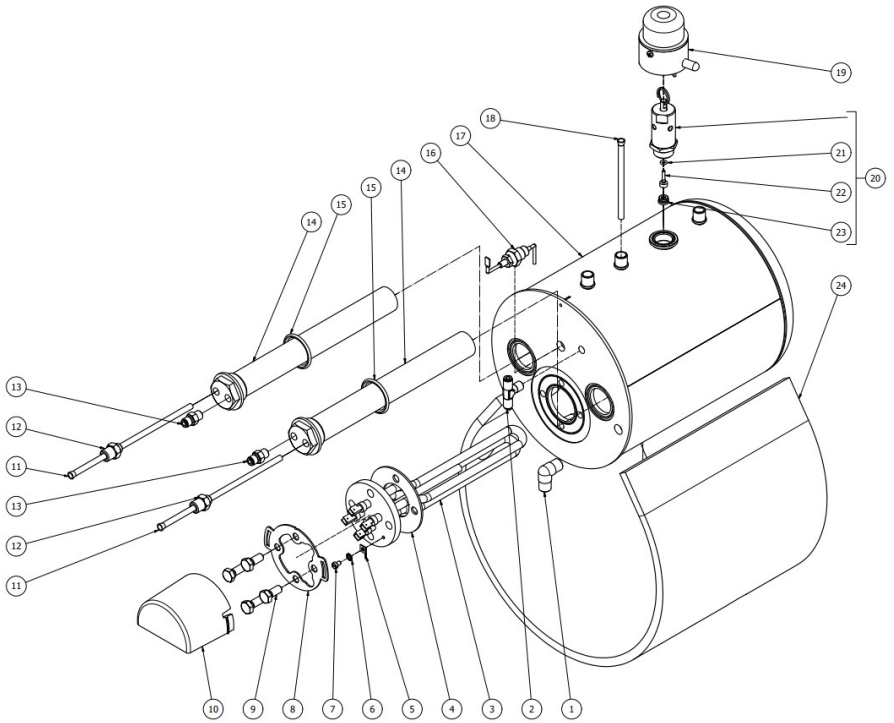

TABLE 6A
OTTO PM

POS	CODE	DESCRIPTION
1	5162534LL	EXCHANGER PIPE 2°GR FITTING 1/8
2	5162533LL	EXCHANGER PIPE 1°GR FITTING 1/8
3	5162532LL	SURPRESSION VALVE PIPE FITTING 1/8
4	7304001AL	FITTING 1/8
5	5492019	GASKET D8 X 2 ASBESTOS FREE
6	5221835	CAP NUT 1/8

BEZZERA **OTTO**

TABLE 6A
OTTO PM

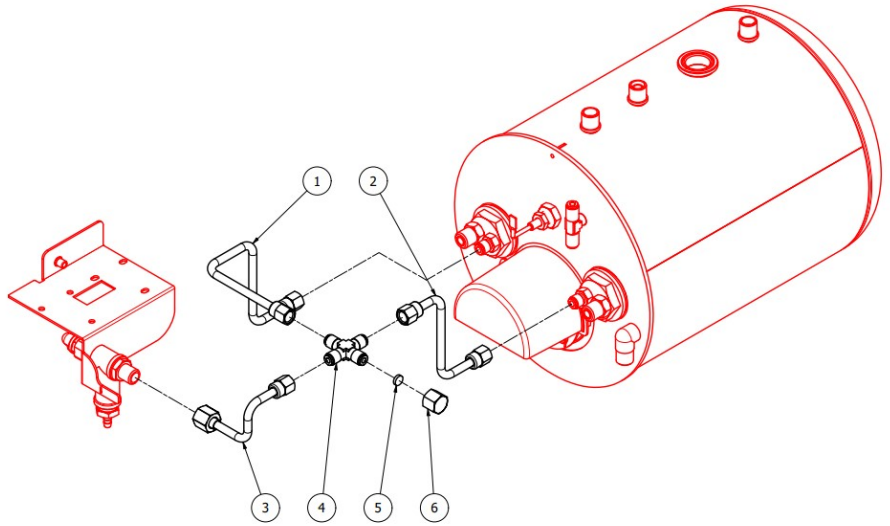

TABLE 6B
OTTO DE

POS	CODE	DESCRIPTION
1	7431001.01	VOLUMETRIC COUNTER+AUTOMATIC LED
2	7496024	OR 2031
3	5130501	COPPER WASHER 13.5X18X1,5
4	5471041	NET FILTER D11 H7 AISI304
5	5302088AL	FITTING 1/4
6	5302089AL	FITTING 1/4
7	5162518LL	VOL. COUNTER/EXCHANGER PIPE 2°GR
8	5162530LL	VOL.COUNTER PIPE 2°FITTING 1/8
9	7304001AL	FITTING 1/8
10	5221835	CAP NUT 1/8
11	5492019	GASKET D8 X 2 ASBESTOS FREE
12	5162531LL	FITTING PIPE 1/8
13	5162529LL	VOL.COUNTER PIPE 1°FITTING 1/8
14	5162517LL	VOL.COUNTER/EXCHANGER PIPE 1°GR
15	7816009	SCREW TCEI M4X10 UNI 5931A2

BEZZERA OTTO

TABLE 6B
OTTO DE

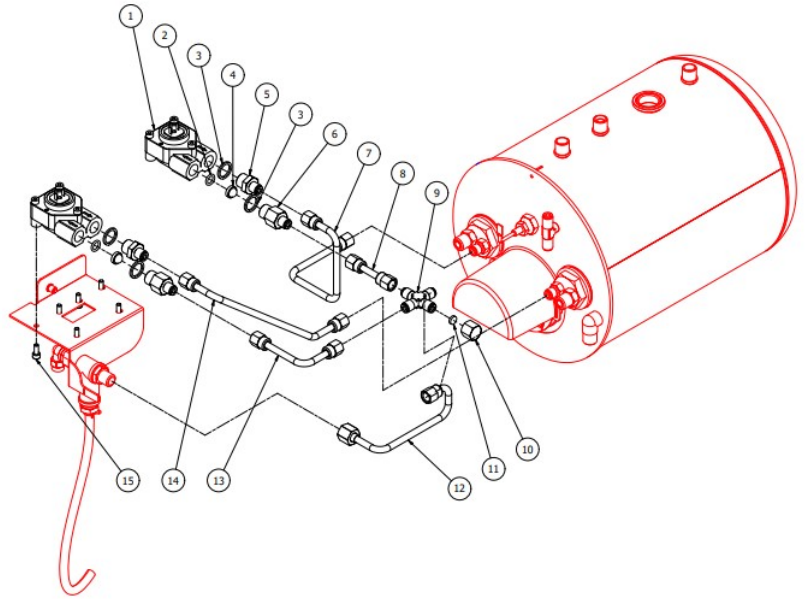

TABLE 7A
OTTO DE/PM

POS	CODE	DESCRIPTION
1	5163399LL	LEFT STEAM COPPER PIPE
2	5162317.01LL	PRESSOSTAT PIPE
3	5492028	GASKET D10.5X4X3
4	7433025	PRESSOSTAT XP100 1/4
5	5163400LL	RIGHT STEAM COPPER PIPE
6	5163401LL	WATER COPPER PIPE
7	5302014AL	FITTING M13X1/8
8	7702320.01	EV.2 WAY 220/230V BIG COIL
8	7702414.01	EV.2 WAYS OLAB 240V BIG COIL
8	7701121.01	SOLENOID VALVE 2WAY OLAB 110V BIG COIL
9	7304502TR	STRAIGHT FITTING 1/8
10	5226405AL	PLUG 1/4
11	5225310AL	FITTING MF 1/8
12	5222228AL	SPARKLING WATER ARCADIA SHORT
13	5471532.01	SPRING FOR ARTICULATION
14	5190501	CUP FOR FITTING PTFE/GLASS
15	5966570	WATER PIPE 14,3 H85 WITHOUT AIR FILTER
16	5493003	GASKET D20.5X15 H1.5 NBR 70SH
17	5471037	ACETALIC AIR FILTER
18	7305020TW	WATER TERMINAL
19	5226601TW	WATER HOSE TERMINAL
20	5194540	SILICON PIPE D8X5X1.5 L=300
21	5194699	SILICON PIPE 8X5X120
22	5162519LL	EXCHANGER/SOLENOID VALVE PIPE 1°GR
23	5162520LL	EXCHANGER/SOLENOID VALVE PIPE 2°GR

BEZZERA OTTO

TABLE 7A
OTTO DE/PM

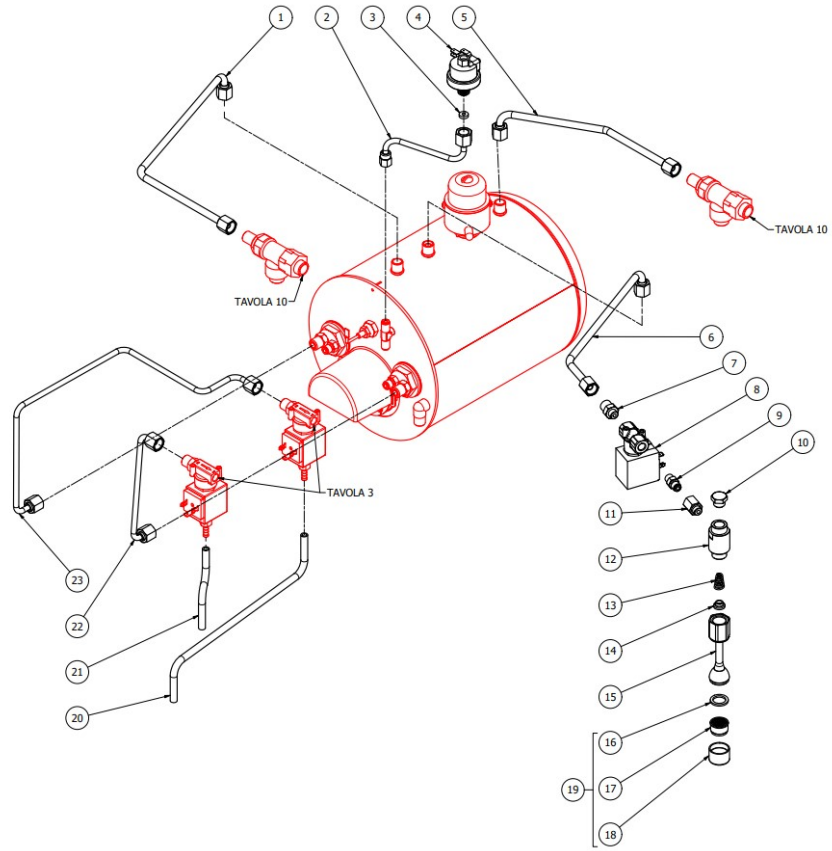

TABLE 7B
OTTO DE - With automatic steam

POS	CODE	DESCRIPTION
1	5163401LL	WATER COPPER PIPE
2	5302014AL	FITTING M13X1/8
3	7702414.01	EV.2 WAYS OLAB 240V BIG COIL
3	7701121.01	SOLENOID VALVE 2WAY OLAB 110V BIG COIL
3	7702320.01	EV.2 WAY 220/230V BIG COIL
4	7304502TR	STRAIGHT FITTING 1/8
5	5225310AL	FITTING MF 1/8
6	5226405AL	PLUG 1/4
7	5222228AL	SPARKLING WATER ARCADIA SHORT
8	5471532.01	SPRING FOR ARTICULATION
9	5190501	CUP FOR FITTING PTFE/GLASS
10	5966570	WATER PIPE 14,3 H85 WITHOUT AIR FILTER
11	5493003	GASKET D20.5X15 H1.5 NBR 70SH
12	5471037	ACETALIC AIR FILTER
13	7305020TW	WATER TERMINAL
14	5226601TW	WATER HOSE TERMINAL
15	5194699	SILICON PIPE 8X5X120
16	5194540	SILICON PIPE D8X5X1.5 L=300
17	5162519LL	EXCHANGER/SOLENOID VALVE PIPE 1°GR
18	5162520LL	EXCHANGER/SOLENOID VALVE PIPE 2°GR
19	7479987	NOZZLE STEAM WITH TIMER PROBE 011
20	5225414AL	REDUCTION M12X1/8
21	5162528LL	STEAM SPEAR SOLENOID PIPE
22	5162527LL	STEAM BOILER/SOLENOID VALVE PIPE
23	7402402	REGULATOR
24	5222223	SPACER
25	5162317.01LL	PRESSOSTAT PIPE
26	5492028	GASKET D10.5X4X3
27	7433025	PRESSOSTAT XP100 1/4
28	5163400LL	RIGHT STEAM COPPER PIPE

BEZZERA OTTO

TABLE 7B
OTTO DE - With automatic steam

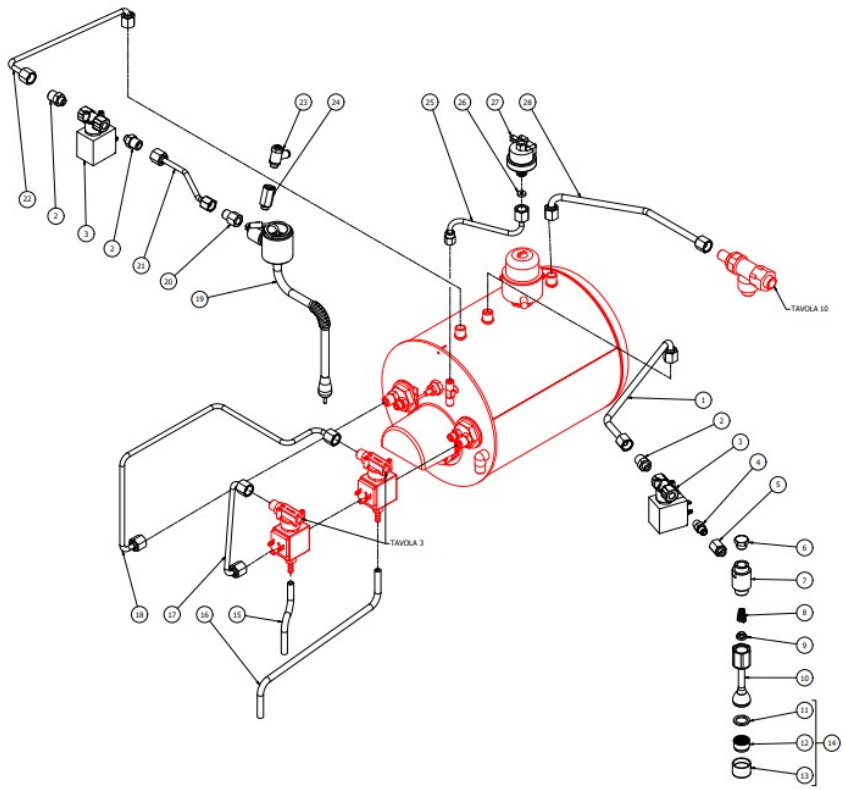

TABLE 8
OTTO DE/PM

POS	CODE	DESCRIPTION
1	5302077AL	FITTING PORT.M14X1 OTXTUBO6X4 OT57USA
2	7496052	OR GASKET 114 VITON
3	5471539	CALIBRATED SPRING D.1,6
4	5224620AL	GASKET-HOLDER ES.12X6.8 OT57USA
5	5493042	GASKET D.11X3
6	5283053TP	SURPRESSION VALVE BODY
7	7496018	OR GASKET 105
8	5224615AL	GASKET-HOLDER SURP.VALVE OT57USA
9	5471505	CALIBRATED SPRING D0.45 H22 AISI302
10	5302017AL	FITTING M12 ES16 H26.5 OT57USA
11	5471019	FILTER D8,5X5 AISI304
12	7304536TR	UNION ELBOW D6 1/8"G RUVECO
13	7611516	CLAMP 10086
14	5194554	SURPRESSION VALVE DRAIN HOSE

BEZZERA OTTO

TABLE 8
OTTO DE/PM

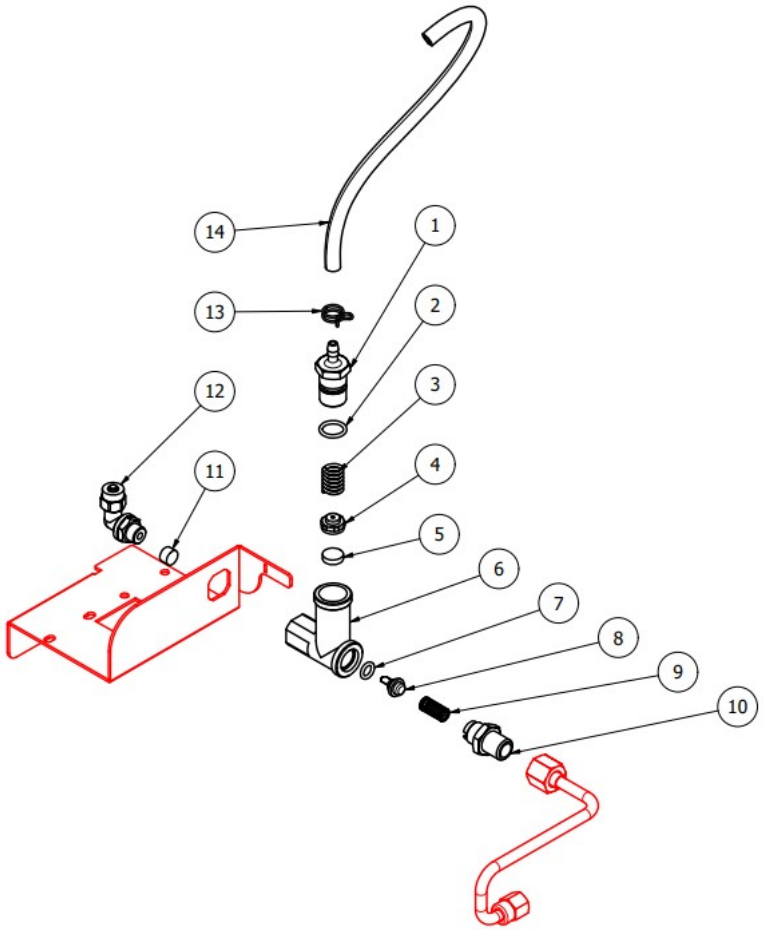

TABLE 9
OTTO DE/PM

POS	CODE	DESCRIPTION
1	7432524.01	PRESSURE GAUGE D60
2	7451504	BALL VALVE MINIBALL 1/4
3	5221869	WASHER D14 X 20 X 1.5 COPPER
4	5302078AL	FITTING 3/8
5	5492011	GASKET D15X3 ASBESTOS FREE
6	5221819	CAP NUT 3/8
7	5225294	FITTING M/F 3/4X3/8
8	5013005LW	DRAIN BOWL COVERING
9	5963038.01	ASSY DISCHARGE TANK
10	7633355SG	SWITCH 110V ON/OFF
10	7633354SG	SWITCH 230V ON/OFF
11	7633628	WHITE LAMP
12	5194671	SILICON TUBE 18X24L85

BEZZERA OTTO

TABLE 9
OTTO DE/PM

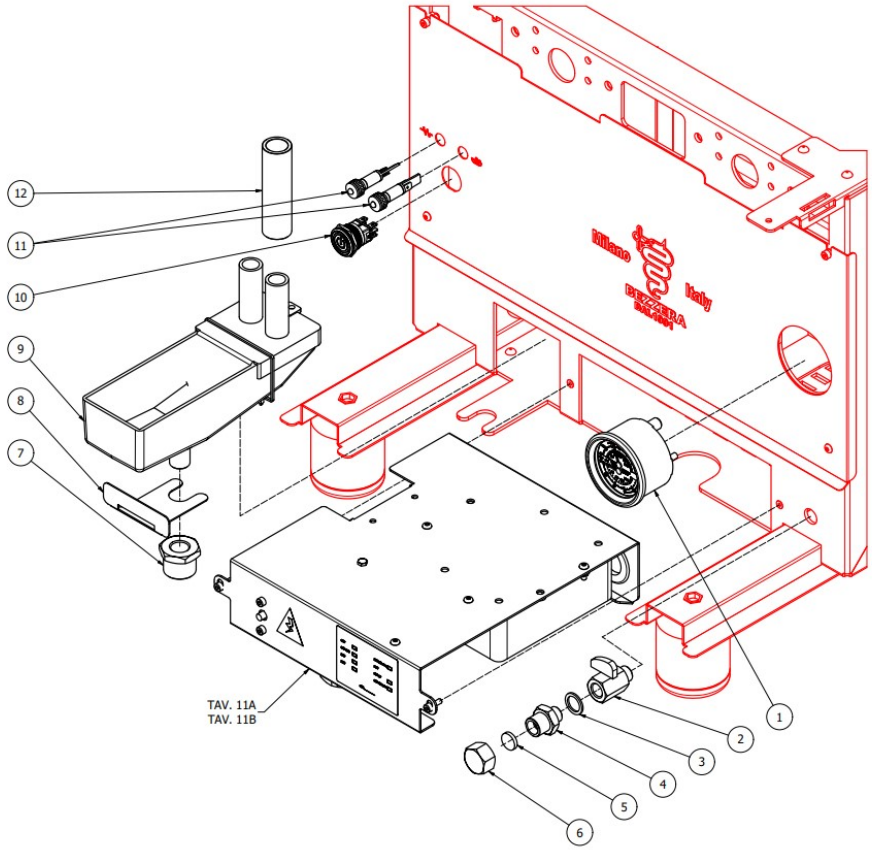

TABLE 10
OTTO DE/PM

POS	CODE	DESCRIPTION
1	7371522	BLACK KNOB 137/70-M8
2	5222823CM	FERRULE 3/8
3	5225610	ARTICULATED JOINT M8
4	5964121	ASSY KNOB TAP FOR STEAM PIPE
5	5221892	NUT 3/8 STEAM TAP
6	5260207DL	TREE D12X60,5 AISI303
7	5471513	SPRING D8 H17 AISI302
8	5261801	WASHER D11
9	5494004	GASKET D12 X 6 PTFE GRAPHITIZED
10	5283058AL	TAP BODY 3/8
11	5496042	GASKET D11X4X4 EPT 70
12	5224603AL	GASKET HOLDER D12X12 OT57USA
13	5225309.01AL	FITTING M13X3/8
14	5964120	ASSY STEAM TAP + PIPE WITHOUT KNOB
15	5471532.01	SPRING FOR ARTICULATION
16	5190501	CUP FOR FITTING PTFE/GLASS
17	5494021	NUT GASKET PTFE H=1,5
18	5494020	GLOBE GASKET 14.3 PTFE
19	5221872.01	LOOSEN NUT 3/8
20	7371004	STEAM PIPE PROTECTION
21	7496096	GASKET OR. RED SILICONE
22	7496095	OR GASKET 6X1.2 EPDM70
23	5266610	4-HOLES STEAM TERMINAL AISI303
24	7479994.01	STEAM TUBE 4 HOLES

BEZZERA OTTO

TABLE 10
OTTO DE/PM

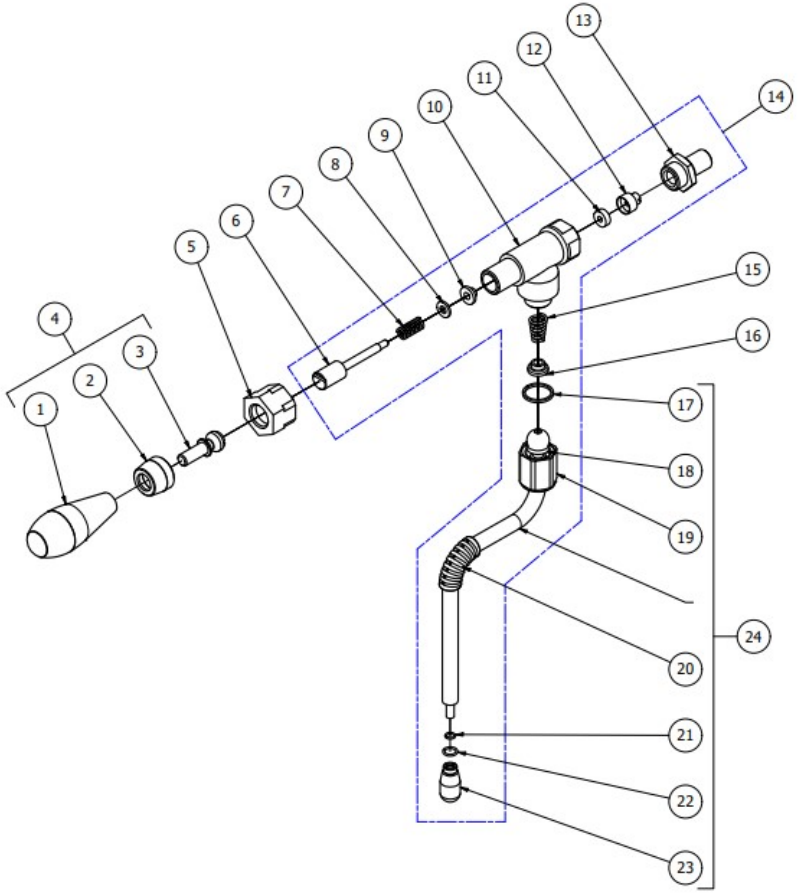

TABLE 11A
OTTO PM

POS	CODE	DESCRIPTION
1	7612514	VISE FV173 4 CONTACS
2	7661007R	LEVEL REGULATOR 220/240V 50/60HZ
2	7661006R	LEVEL REGULATOR 100/120V 50/60HZ
3	7635423	RELAY 30A 110V
3	7635422	RELAY 30A 220/240V
4	7434001	THERMOSTAT MANUAL
5	7614004	NUT PG21 ES.30 H6 POLYAMIDE
6	7614002	CABLE-PRESS PG21 POLYAMIDE
7	5052405LL	ELECTRIC BOX W/COMPASSES

BEZZERA **OTTO**

TABLE 11A
OTTO PM

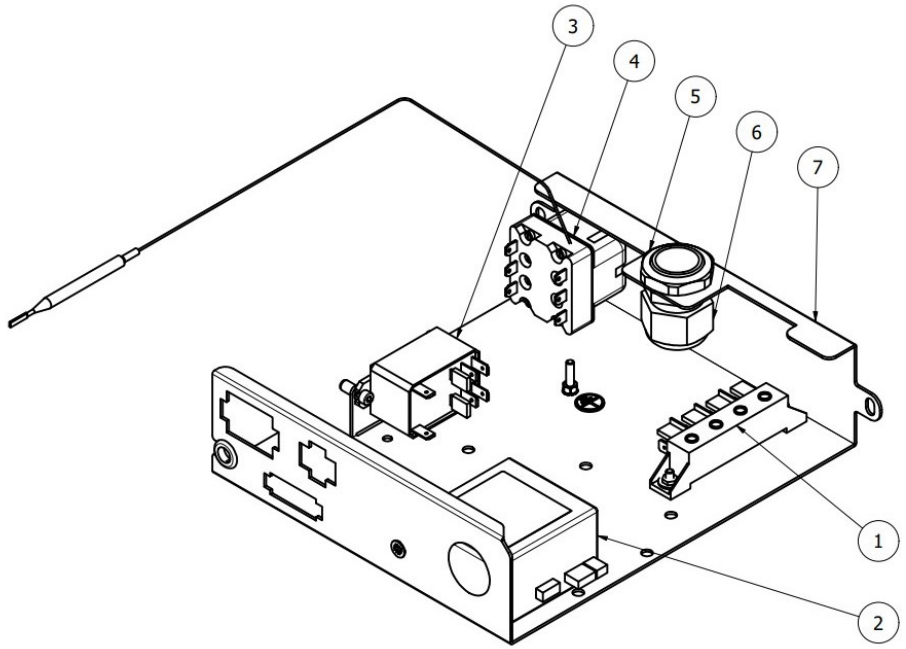

TABLE 11B
OTTO DE

POS	CODE	DESCRIPTION
1	7612514	VISE FV173 4 CONTACS
2	7662643.04PR	ELECTRONIC DOSAGE 220/240V
2	7662759GI	DOSAGE 3D5 DE FULL RANGE SW.1.07
2	7662641.04PR	ELECTRONIC DOSAGE 110/120V
3	7635423	RELAY 30A 110V
3	7635422	RELAY 30A 220/240V
4	7434001	THERMOSTAT MANUAL
5	7614004	NUT PG21 ES.30 H6 POLYAMIDE
6	7614002	CABLE-PRESS PG21 POLYAMIDE
7	5052405LL	ELECTRIC BOX W/COMPASSES

BEZZERA **OTTO**

TABLE 11B
OTTO DE

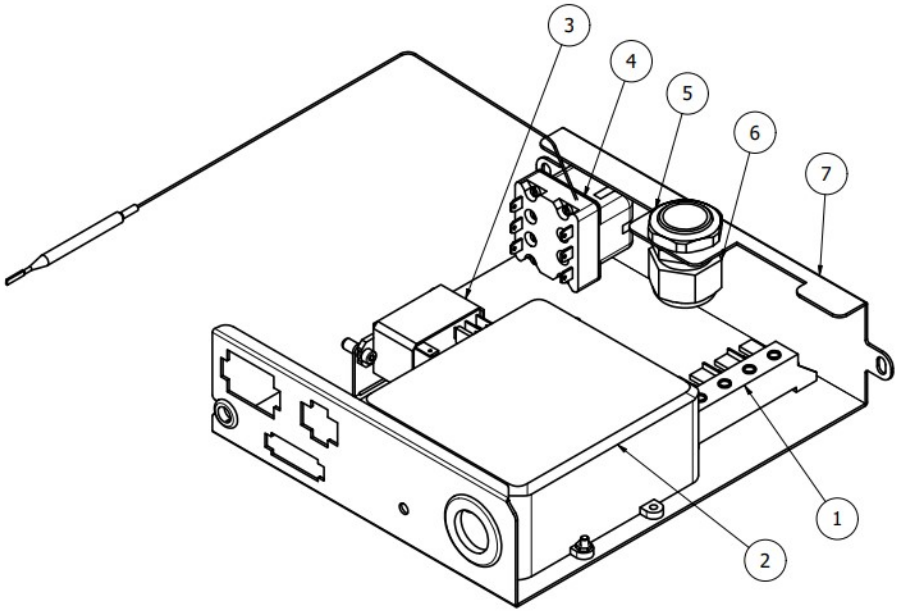

TABLE 12
OTTO DE/PM

POS	CODE	DESCRIPTION
1	5373001	COFFEE-PRESS ABS
2	7990603	CLEANING BRUSH FOR COFFEE MACHINE
3	5372101	BLACK MEASURE
4	5471038	BLIND FILTER AISI304
5	5471031.01	FILTER 1 CUP 10 GRAMS
6	5471035	FILTER 2 CUPS 20 GRAMS
7	7305006TW	SPOUT 1 WAY S/PB+PWP
8	7305007TW	SPOUT 2 WAYS WITHOUT PB+PWP
9	5471527	FILTER-HOLDER SPRING D1.2 AISI 302
10	5286016TW	FILTER-HOLDER TILTED HANDLE BZ GROUP
11	5371203	HANDLE
12	7816026	SCREW TCEI M12X60
13	7809810	SCREW PLAS FIX 45 TC POZI D.3,5X10
14	7493021	GASKET FOR LOGO HANDLE
15	5371204.01	CHROMED PLUG
16	5371205	PLATE WITH LOGO
17	5978508.02	ASSY HANDLE WITH LOGO
18	5965587.02R	ASSY FILTER-HOLDER 2TZ BZ HANDLESPOUT W/LOGO
18	5965586.02R	ASSY FILTER-HOLDER 1TZ BZ SPOUT 50°W/LOGO

BEZZERA **OTTO**

TABLE 12
OTTO DE/PM

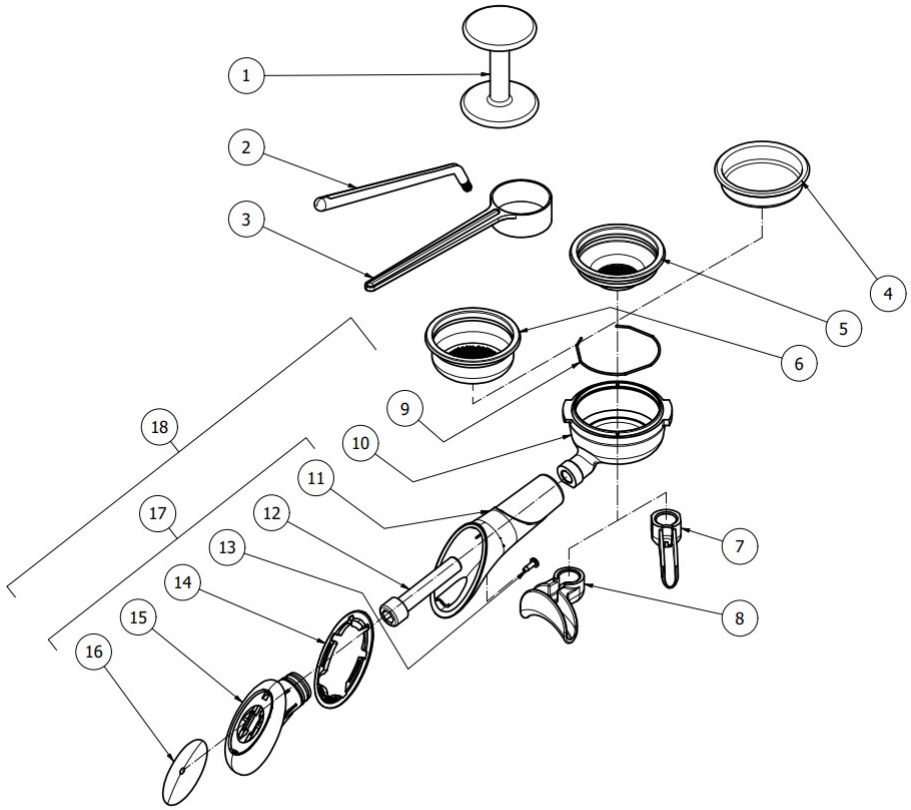



G. BEZZERA S.R.L.
MACCHINE PER CAFFE' ESPRESSO
Via Luigi Bezzera,1
20088 Rosate - Milano - Italy
Tel. ++39 02 90848102 r.a. - Telefax ++39 02 90870287
Web: www.bezzera.com
e-mail: admin@bezzera.it