Family
COOKING EQUIPMENT STAR 90

Model
NCT9FE8E

Section
ELECTRIC COOKERS

Code
CR0590270

ELECTRIC SOLID TOP ON OVEN - 4 - INDEPENDENT HOTPLATES

Electric solid top hotplate with 4 independent plates, constructed in AISI 304 stainless steel. Recessed perimeter to contain spills. Hotplate in carbon steel plate with smooth chromed surface. Radiused corners and rounded top edge. Hotplate not built-in but removable. Hotplate surface 720x720x30h mm from top. 4 independent hotplates with 4 kW output. Thermostat control providing surface temperature adjustment from 50 to 400 °C. Automatic reset safety thermostat which shuts off heating in the event the appliance is switched on with an unsuitable pan or no pan at all. Indicator leds for verifying correct appliance operation. GN 2/1 conventional electric oven. Ovenäheated by independently controlled top and bottom heating elements. Thermostat control providing temperature adjustment from 100°C to 330°C. 4-position selector switch, safety thermostat. Cooking chamber dimensions, 535x650x300h mm. Oven power: 6 kW. Indicator leds for verifying correct appliance operation. Height-adjustable feet in stainless steel. IPX5 protection rating.



Technical data

Width mm:	800	Internal dim. oven mm:	535x650x300h
Depth mm:	900	Oven capacity:	
Height mm:	870	Oven power kW:	6 kW
Weight kg.:	178.00	Qty heating zones:	4 x 4 kW
Volume m³:	1.00	Plate dim. mm:	720x720x30h
Power supply:	VAC400 3N 50Hz	Dim. heating zone mm:	
Gas power kW:		Qty tank:	
Electric power kW:	22.00	Tank dim. mm:	
		Tank capacity l:	

COMPANY WITH MANAGEMENT SYSTEM CERTIFIED BY DNV GL
= ISO 9001 =
= ISO 14001 =

Family
COOKING EQUIPMENT STAR 90

Model
NCT9FE8E

Section
ELECTRIC COOKERS

Code
CR0590270

ELECTRIC SOLID TOP ON OVEN - 4 - INDEPENDENT HOTPLATES

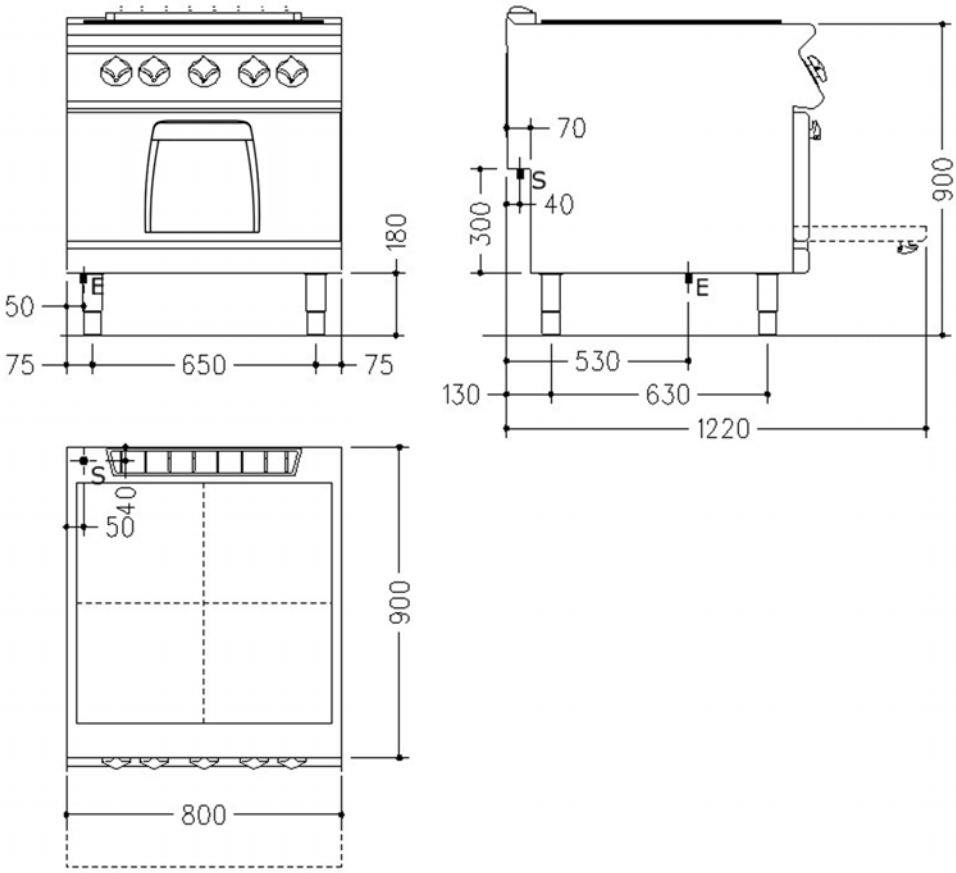

Legend

(E) Socket 1: Connection supply terminal floor level (+100mm). Spare cable 1500mm

(E) Socket 2: H=200mm

(G) Gas:

(AD) Softened water:

(AF) Cold water:

(AC) Hot water:

(S) Draining:

(FR) In e out freon:

(V) Steam:

COMPANY WITH MANAGEMENT SYSTEM CERTIFIED BY DNV GL
= ISO 9001 =
= ISO 14001 =