coffee wakes up the world

User Manual

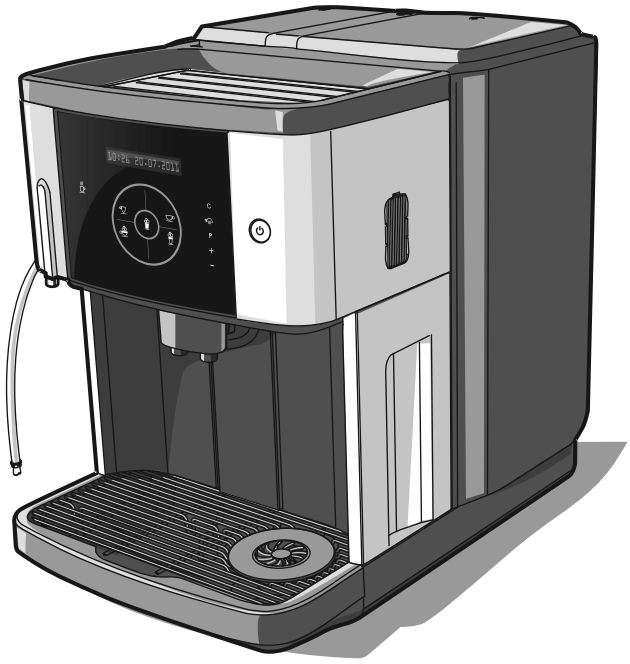

Coffee machine 900

English

V0.16

Valid for all WMF 900 models

Series 900 Order number 33 2624 2010 Edition 05.2014

Downloaded from www.Manualslib.com manuals search engine

Congratulations on the purchase of your WMF coffee machine.

The WMF 900 coffee machine is a fully automatic single cup machine for espresso, café crème, cappuccino, milk coffee, latte macchiato, milk foam, and hot water.

Each beverage is freshly brewed which guarantees a high quality beverage.
The operator can control the coffee machine via the two-line display.



Follow the User Manual

> Always follow the User Manual, pay special attention to the safety instructions and Safety chapter.
> Ensure that the staff and all users have access to the User Manual.
> Read the User Manual carefully prior to use.

Important.
Follow the User Manual signs and symbols
▷ *page 8*
Observe the Safety chapter
▷ *starting on page 76*



- Please be sure to follow the instructions in the Start-up chapter ▷Start-up program ▷Water filter, page 12 and establish the appropriate settings.
- In the event of failure to comply with maintenance information (Maintenance ▷page 84), no liability is accepted for any resultant damage. Similarly, all guarantee / warranty claims cease to apply in such cases.

IMPORTANT

Consult the warranty / guarantee section
▷ *from page 83*

Downloaded from www.Manualslib.com manuals search engine

Chapter 1 Introduction 6

1.1 Parts of the coffee machine 6
User Manual Signs and Symbols 8
Ready to operate 9
Glossary 9

Chapter 2 Start-up 10

2.1 Start-up safety instructions 10
2.2 Installation location 11
2.3 Unpacking 11
2.4 Drip tray 11
2.5 Water tank 12
2.5.1 Insert water filter (optional) 12
2.5.2 Determine the water hardness 12
2.5.3 Fill the water tank. 12
2.6 Grounds container 13
2.7 Connect up the milk 13
2.7.1 Milk lance 14
2.8 Fill the bean hopper 14
2.9 Power connection 15
2.10 Function pads 15
2.11 Switch on the coffee machine / start-up program 16
Setting options 18

Chapter 3 Operation 19

3.1 Operation safety instructions 19
3.2 Switch on the coffee machine 19
3.3 Beverage dispensing 20
3.3.1 Beverage buttons 21
3.4 Dispense milk or milk foam 22
3.4.1 Warm milk. 22
3.4.2 Milk foam 22
3.5 Hot water dispensing 22
3.6 Height adjustment of the All-in-One spout 23
3.7 SteamJet cup warmer 23
3.8 Coffee strength for the next beverage 24
3.9 Cup volume for the next beverage 24
3.10 Pot function for café crème 24
3.11 Bean hopper 25
3.12 Manual insert 25
3.13 Grounds container 26
3.14 Drip tray 26
3.15 Switch off the coffee machine 27

Chapter 4 Settings 28

4.1 Cup volumes (Cup size) 30
4.1.1 Dispensing test 30
4.2 Beverage setting 31
4.2.1 Dispensing test 31
4.2.2 Access beverage settings 31

Downloaded from www.Manualslib.com manuals search engine

4.2.3 Water volume . . . 32
4.2.4 Coffee strength . . . 32
4.2.5 Milk foam volume . . . 32
4.2.6 Rest time . . . 32
4.2.7 Sequence of dispensing . . . 33
4.2.8 Pre-infusion . . . 33
4.3 User profiles 34
4.3.1 Name the user profile . . . 34
4.3.2 Set up the user profile . . . 35
4.3.3 Dispense beverages using the user profile . . . 35
4.3.4 Restore the user profile to the standard settings . . . 36
4.4 Basic settings 37
4.4.1 Access basic settings . . . 37
4.4.2 Language . . . 37
4.4.3 Time . . . 38
4.4.4 Date . . . 38
4.4.5 Date / time (display) . . . 38
4.4.6 Switch-on time . . . 38
4.4.7 Switch-off time . . . 38
4.4.8 Eco-mode . . . 39
4.4.9 Water hardness . . . 40
4.4.10 Water filter . . . 40
4.4.11 Audio signal . . . 40
4.4.12 Brewing temperature . . . 40
4.4.13 Office functions . . . 40
Cleaning interval 40
Activate PIN function 41
4.4.14 Warm rinsing . . . 41
4.4.15 Factory settings . . . 41
4.4.16 Change PIN . . . 42
4.4.17 Display contrast . . . 42
4.5 Counters 43
4.6 System information 44
4.6.1 Software version . . . 44
4.6.2 Device name . . . 44
4.6.3 Machine number . . . 44
4.6.4 Date of production . . . 44
Chapter 5 Other settings 45
5.1 Set grinding degree 45
5.1.1 Incorrect grinding degree setting . . . 45
Chapter 6 Care 46
6.1 Care safety instructions 46
6.2 Cleaning intervals overview 48
6.3 Start care programs 49
6.4 Connect & Clean milk system rinsing 49
6.4.1 Clean the milk system . . . 49
Milk system cleaning 50
Connect & Clean milk system rinsing 50
6.5 Machine cleaning 52
6.6 Change water filter 54
Change water filter 54
Rinse water filter 55

Downloaded from www.Manualslib.com manuals search engine

6.7 Descaling 55
6.8 Clean the steam nozzle 59
6.9 Clean the grounds container 60
6.10 Clean the drip tray, drip tray grid, and cup warmer 60
6.11 Clean the housing and control panel 61
6.12 Clean the water tank 61
6.13 Clean the bean hopper 61
6.14 Release blocked grinder 62
6.15 Clean the milk system 62
6.16 Clean the brewing unit and brewing chamber 65

Chapter 7 HACCP cleaning schedule 67

Chapter 8 Messages and instructions 69

8.1 Operating messages 69
8.1.1 Empty grounds container 69
8.1.2 Fill the water tank. 69
8.1.3 Drip tray missing 69
8.1.4 Bean hopper is empty 69
8.1.5 Insert ground coffee 70
8.1.6 Clean the machine 70
8.1.7 Change filter 70
8.1.8 Descale machine 70
8.2 Error messages and malfunctions 71
8.2.1 Error messages on the display 71
8.2.2 Errors without error messages 74

Chapter 9 Safety 76

9.1 Hazards to the operator 76
9.2 Hazards to the coffee machine 79

Chapter 10 Intended use and Directives 81

10.1 Intended use 81
10.2 Duties of the owner / operator 81
10.3 Directives 82

Chapter 11 Warranty for commercial use 83

11.1 Warranty for commercial use 83
11.2 No warranty 83

Chapter 12 Guarantee and directives for private use 84

12.1 Intended use 84
12.2 Directives 84
12.3 Guarantee and warranty for private use 84

Chapter 13 Premium service and maintenance 24 months 85

Chapter 14 Technical data 86

Chapter 15 Shipping and disposal 89

Index 90

Downloaded from www.Manualslib.com manuals search engine

Chapter 1 Introduction

1.1 Parts of the coffee machine

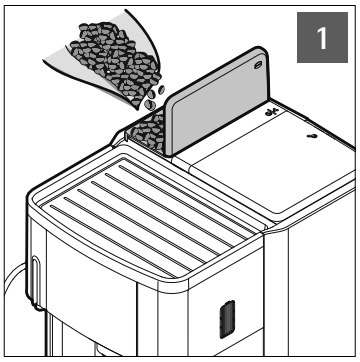

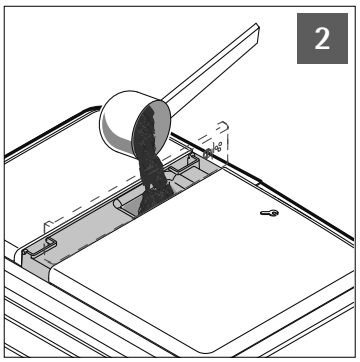

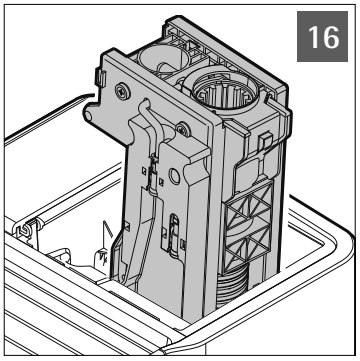

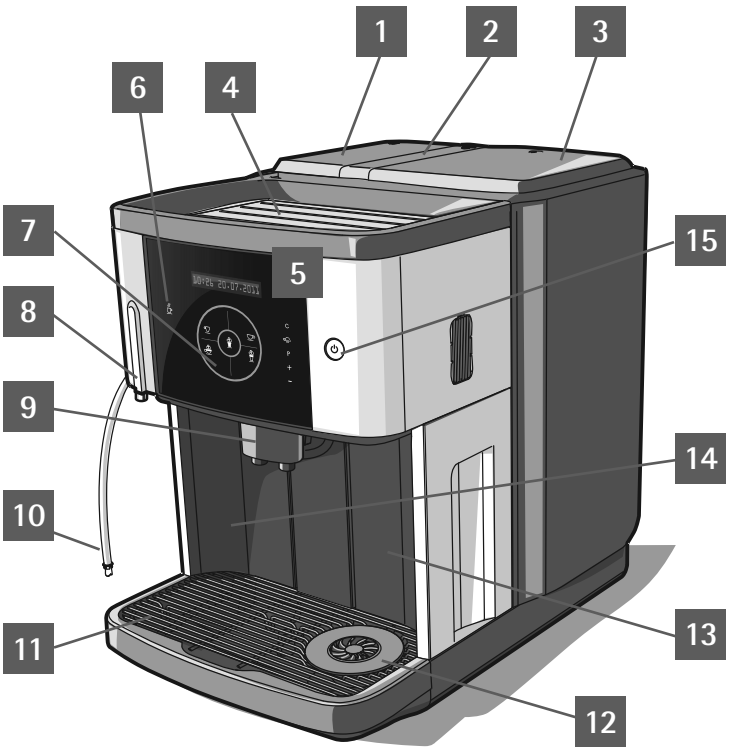



Downloaded from www.Manualslib.com manuals search engine

1 Bean hopper

2 Manual insert

3 Brewer lid

4 Cup storage (heated)

5 Display

6 Hot water button

7 Beverage buttons

8 Hot water spout

9 All-in-One spout

10 Milk hose

11 Removable drip tray with drip grid

12 SteamJet cup warmer

13 Water tank

14 Grounds container

15 ON/OFF button

16 Brewing unit

Display and functional pads

17 C pad

18 Star pad

19 P pad

20 Minus pad

21 Plus pad

Downloaded from www.Manualslib.com manuals search engine

User Manual Signs and Symbols

Personal injury safety instructions
If the safety instructions are not followed, this could lead to mild to severe injury in case of improper use.

⚠ WARNING

Start-up safety instructions
▷ *page 10*

Observe the Safety chapter
▷ *starting on page 76*

Personal injury safety instructions
If the safety instructions are not followed, this could lead to mild injury in case of improper use.

⚠ CAUTION

Start-up safety instructions
▷ *page 10*

Operation safety instructions
▷ *page 19*

Care safety instructions
▷ *page 46*

Observe the Safety chapter
▷ *starting on page 76*


Electrocution


Hot steam


Hot surfaces


Bruising or crushing hazard


Slipping hazard

Notes of property damage
- to the coffee machine
- for the installation location

Always follow the User Manual.

IMPORTANT

Consult the warranty / guarantee section
▷ *from page 83*

Note
Tip
- Instructions for safe use and tips for easier operation.

NOTE

TIP

Downloaded from www.Manualslib.com manuals search engine

Ready to operate

The descriptions in the User Manual always assume that the coffee machine is ready to operate.



Glossary

Term	Explanation
•	• Listings, selection options
✻	✻ Individual steps
Text in italics	*Description of coffee machine state and/or explanations of automatic steps.*
Beverage dispensing	Dispensing coffee, milk, or hot water
Capacity	For example the capacity of the water filter in liters of water it can filter
Carbonate hardness	Quoted in °dKH. The water hardness is a measure of the calcium dissolved in the water.
Milk system	All-in-One spout, milk nozzle and milk hose
O-rings	Seals
Pre-infusion	Prior to brewing cycle, coffee is briefly infused in order to ensure a more intense release of its aromatic substances.
Pressing	Automatic pressing of ground coffee prior to brewing
Rinsing	Intermediate cleaning

Downloaded from www.Manualslib.com manuals search engine

Chapter 2 Start-up

(For initial start-up after delivery from the factory)

2.1 Start-up safety instructions



Follow the User Manual

> Always follow the User Manual, pay special attention to the safety instructions and Safety chapter.

> Ensure that the staff and all users have access to the User Manual.

> Read the User Manual carefully prior to use.

⚠ CAUTION

Important.
Follow the User Manual signs and symbols
▷ *page 8*

Observe the Safety chapter
▷ *starting on page 76*



Hazard to life due to electrical shock if not followed

The voltage inside the coffee machine is a hazard to life.

- Never open the housing.
- Never loosen the screws, and do not remove any housing parts.

⚠ WARNING

Observe the Safety chapter
▷ *starting on page 76*



Conditions for usage and installation

Follow the User Manual.

IMPORTANT

Technical data
▷ *starting on page 86*

Downloaded from www.Manualslib.com manuals search engine

2.2 Installation location

- The installation location must be dry and protected against water spray.
- Some condensate, water, or steam can always be discharged from a coffee machine.

> Do not use the coffee machine outdoors.

> Set up the coffee machine so that it is protected against water spray.

> Protect the installation surface with a waterproof and heatproof underlayment.

IMPORTANT

Consult the warranty / guarantee section
▷ *from page 83*

Technical data
▷ *starting on page 86*

2.3 Unpacking

> Packaging material in the box contains accessories. Do not throw away.

> Make sure that the coffee machine is intact. In case of doubt, do not start up the coffee machine, and inform the WMF Service.

> Retain the original packaging in the event of any subsequent return.

IMPORTANT

Consult the warranty / guarantee section
▷ *from page 83*

For accessories and identification of machine parts
▷ *page 6*

Technical data
▷ *starting on page 86*

✻ Unpack the coffee machine

✻ Place the coffee machine on a stable, horizontal surface

2.4 Drip tray

✻ Insert the drip tray with the drip tray grid

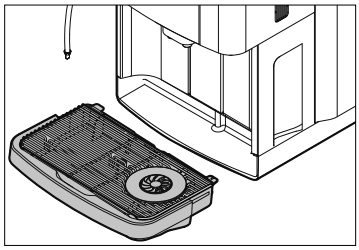

Downloaded from www.Manualslib.com manuals search engine

2.5 Water tank

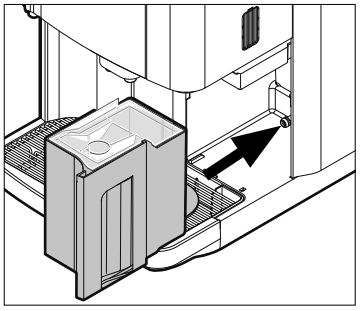

✻ Remove water tank, remove lid
✻ Take out any accessory components contained

2.5.1 Insert water filter (optional)

✻ Remove the in-built water sieve from the water tank [1]

Be sure to keep the drain screen.

✻ Place the water filter adapter onto the water tank coupling from above (with lock open) and lock into place [2]
✻ Unpack the water filter and insert into the water filter adapter [3]

Note

If the water hardness is between 0 and 4 °dKH, no water filter is needed.
▷ *Start-up program page 17*

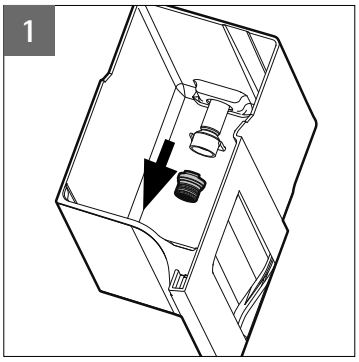

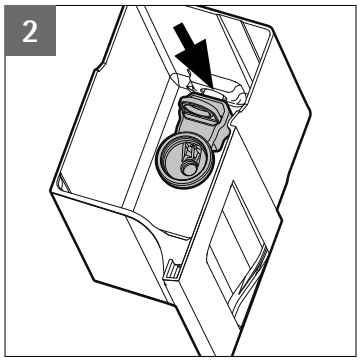

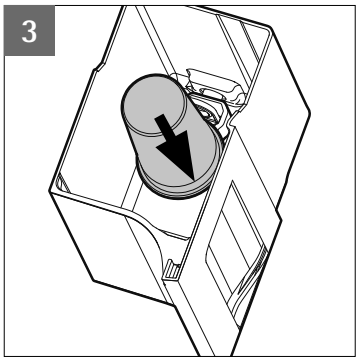

2.5.2 Determine the water hardness

✻ Request the water hardness reading from your water supplier, or determine it by using the WMF carbonate hardness test in the accessories (complete with instructions)

The unit used is the "Deutsche Karbonathärte" (°dKH)

2.5.3 Fill the water tank

✻ Rinse out the water tank and fill it with clean cold drinking water
✻ Place lid on water tank and insert the water tank until it stops

Downloaded from www.Manualslib.com manuals search engine

2.6 Grounds container

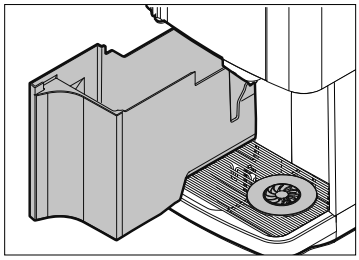

✻ Remove grounds container
✻ Remove the accessories from the coffee grounds container (if present)

2.7 Connect up the milk

When shipped, the milk hose has been inserted over the assembled All-in-One spout.
Use a suitable milk nozzle on the milk hose.

Milk nozzles

Colour		
• brown	=	milk temperature 4–8 °C
• transparent	=	milk temperature approx. 21 °C

The grounds container must not be inserted.

✻ Move the All-in-One spout to the lowest position
✻ Insert the suitable milk nozzle into the milk hose
✻ Insert the milk hose into the guide, see illustration

The milk hose must not be under tension or bent when adjusting the height of the All-in-One spout.

The milk hose must always be placed carefully into the guide. The milk hose must not be in front of the coffee grounds container or the coffee grounds container opening.

✻ Insert the end of the milk hose into the milk pack

Downloaded from www.Manualslib.com manuals search engine

2.7.1 Milk lance

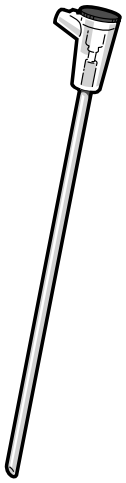

Stick the WMF milk lance into the milk container and connect it to the milk hose. The exterior of the milk hose no longer comes into contact with the milk, for optimal hygiene. Adjust the porosity of the milk foam as desired by turning the screw. Clean the milk lance in the dishwasher.

✻ Place the milk hose with the milk nozzle on the milk lance connection

The milk hose can be shortened when used with the milk lance.

✻ Push All-in-One spout all the way down
✻ Run the milk hose so that it fits, then cut it off so that at least 18 cm sticks out the right side of the machine
✻ Replace the milk nozzle on the milk hose after cutting the hose to length
✻ Stick the milk lance in the tetra-pak or place it in a milk container

- Clean the milk lance with the cleaning brush or in the dishwasher after use.
- Bend the included cleaning brush upward slightly for cleaning.

Additional instructions for using the milk lance
▷ *Milk lance packaging*

2.8 Fill the bean hopper

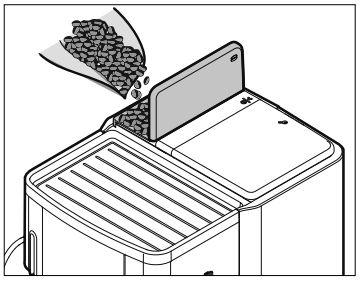

✻ Open the bean hopper
✻ Remove and read the instruction note
✻ Fill with coffee beans
✻ Lock the lid

Foreign objects can damage the grinders. This damage is not covered under the warranty.
> Ensure that no foreign objects land in the coffee bean hopper.

IMPORTANT

Consult the warranty / guarantee section
▷ *from page 83*

Downloaded from www.Manualslib.com manuals search engine

2.9 Power connection

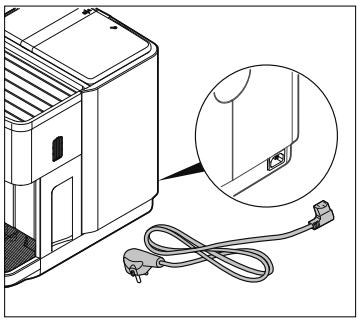

✻ Connect the power cord to the connection on the back side of the coffee machine
✻ Plug the mains plug into a grounded plug

2.10 Function pads

C pad

• Cancel process or entry	*touch briefly*
• Cancel beverage dispensing	*touch briefly*

Star pad (optional)

• SteamJet cup warmer	*press and hold*
• Individual user profiles	*touch briefly*

P pad

• Access programs	*touch briefly*
• Confirm selection	*touch briefly*

Minus pad

• Step back	*touch briefly*
• Reduce value	*touch briefly*
• Reduce coffee strength	*touch briefly*
• Select cup size	*press and hold*

Plus pad

• Step forward	*touch briefly*
• Increase value	*touch briefly*
• Increase coffee strength	*touch briefly*
• Select cup size	*press and hold*
• Pot function	*press and hold*

Downloaded from www.Manualslib.com manuals search engine

2.11 Switch-on the coffee machine / start-up program

✻ Switch on the coffee machine using the ON/OFF button

Coffee machine switches on.

The start-up program starts.

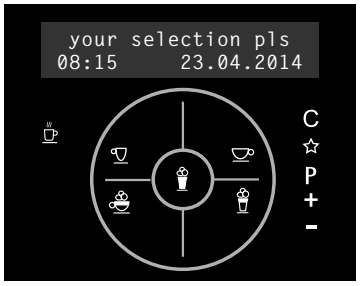


```
language: english
OK: P   change: -/+
```

✻ Touch **+** until the desired language is displayed

✻ Confirm the desired setting with **P**

The start-up program provides a step-by-step guide through the remaining start-up steps on the display.

> Follow the display messages.

• The set values can be changed after start-up.

TIP

Change settings
▷ Settings
starting on page 28

```
initial set-up
of your WMF 900
```

This message is displayed for 5 seconds. The software then provides a guide through the initial settings.

Time

```
time        hh:mm:ss
OK: P    change: -/+
```

The current time.

hh = hour (two places)

mm = minutes (two places)

ss = seconds (two places)

✻ Adjust values with **+** and **-**

✻ Confirm the desired setting with **P**

Date

```
date       dd.mm.aaaa
OK: P    change: -/+
```

The current date.

dd = day (two places)

mm = month (two places)

aaaa = year (four places)

✻ Adjust values with **+** and **-**

✻ Confirm the desired setting with **P**

Downloaded from www.Manualslib.com manuals search engine

Switch-off time

```
sw. off time: 30 min
OK: P    change: -/+
```

Automatic switch-off time in minutes after the last beverage dispensing.
If set to 0 min the coffee machine does not shut off automatically.
✻ Adjust values with + and -
✻ Confirm the desired setting with P

Eco-mode

```
     ECO-mode: 2
OK: P    change: -/+
```

Standard setting Eco-mode 2.
✻ Adjust values with + and -
✻ Confirm the desired setting with P

Eco-mode
▷ *page 39*

Water hardness

```
water hardn.:     16
OK: P    change: -/+
```

The hardness of the water being used.
Enter the result of the carbonate hardness test here.
✻ Adjust values with + and -
✻ Confirm the desired setting with P

Carbonate hardness test
▷ *Included accessories*

Burn hazard. Scalding hazard.

- When dispensing beverages and steam, hot liquid comes out of the spouts. The adjacent surfaces and spouts become hot.

> When dispensing beverages and steam, do not reach beneath the spouts.
> Do not touch the spouts immediately after dispensing.

⚠ CAUTION

Observe the Safety chapter
▷ *starting on page 76*

Water filter

```
 water filter:     no
OK: P    change: -/+
```

If the water filter is set to 100 l or 200 l then the filter should be rinsed now.
100 l = water filter for 100 liters of water
200 l = water filter for 200 liters of water
no = no water filter

Capacity life shown applies for 10 °dKH.

Insert water filter
▷ *page 12*

Downloaded from www.Manualslib.com manuals search engine

place 3L container under the spouts	*When rinsing the filter, you will hear unusual noises. This is normal. The noises will end during the filter rinsing.* ✻ Place a collection container with approx. 3 liters capacity under the hot water spout
heating up ...	*Coffee machine heats up.* *A warm-up rinsing follows the heating-up process. This warms up all the pipes.* *After each brewing cycle, in the heating up phase and during the care programs, release water runs into the drip tray.* ✻ Place a collection container with 120 ml capacity under the All-in-One spout *The warm-up rinsing lasts approx. 40 seconds.*

Start-up complete

A brewing test is performed following the end of the start-up program.
The espresso button flashes.
✻ Place a suitably sized cup under the All-in-One spout
✻ Touch the flashing beverage button
Brewing test starts.
The coffee grinder will be filled with coffee beans during the brewing test.
✻ Discard this first cup of coffee

your selection pls 08:15 23.04.2014	*The coffee machine is now ready for use.* Start-up is complete. All settings can be changed now, or at a later time.

Setting options

- Cup volumes (cup size) ▷page 30
- Beverage setting ▷page 31
- Set grinding degree ▷page 45
- Basic settings ▷page 37

Downloaded from www.Manualslib.com manuals search engine

Chapter 3 Operation

3.1 Operation safety instructions

Burn hazard. Scalding hazard.

- When dispensing beverages and steam, hot liquid comes out of the spouts. The adjacent surfaces and spouts become hot.

> When dispensing beverages and steam, do not reach beneath the spouts.

> Do not touch the spouts immediately after dispensing.

> Always place a suitable cup under the spout before dispensing beverages.

⚠ CAUTION

Observe the Safety chapter
▷ *starting on page 76*

Health hazard.

- Only use products that are suitable for consumption and for use with the coffee machine.

> The bean hopper and manual insert may only be filled with materials for the use intended.

⚠ CAUTION

Observe the Safety chapter
▷ *starting on page 76*

3.2 Switch-on the coffee machine

Initial start-up
▷ *page 10*

✻ Switch on the coffee machine using the ON/OFF button

Coffee machine switches on and heats up.

An automatic warm-up rinsing starts.

When the coffee machine is ready to dispense beverages, the "Ready to operate" display appears.

Switch on and switch-off times
▷ *Settings*
▷ *Basic settings*
page 38

Energy saving mode

If an Eco-mode has been activated, this is shown on the display with an E in front of the date.

```
your selection pls
08:15  E 23.04.2014
```


Downloaded from www.Manualslib.com manuals search engine

3.3 Beverage dispensing

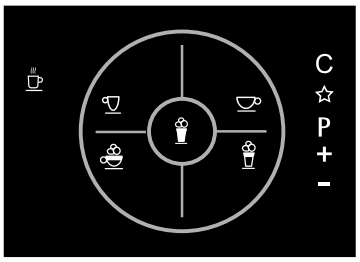

Beverage buttons
▷ *page 21*

Height adjustment of the All-in-One spout
▷ *page 23*

Touching the beverage button triggers the dispensing of the beverage selected.

- Lit up beverage button = ready to dispense
- Flashing beverage button = beverage dispensing
- Unlit button = not ready to dispense / button disabled

✻ Place a suitably sized cup below the combi spout
✻ Touch the desired beverage button
The desired beverage is dispensed.

Cancel beverage dispensing
✻ Touch C

Interrupting milk dispensing
✻ Briefly press the beverage button
The milk portion dispense cycle is interrupted and is followed by coffee dispensing.

Warm-up rinsing
During a warm rinsing, the coffee lines are flushed with hot water. The water warms the brewing system and guarantees an optimum coffee temperature.

Warm-up rinsing activate / deactivate
Basic settings
▷ *page 41*

When the warm-up rinsing is activated
✻ Briefly press the beverage button
If more than 10 minutes have passed since the last beverage was dispensed, the display shows the question of whether to perform a warm-up rinsing.
The warm-up rinsing can be skipped.

Downloaded from www.Manualslib.com manuals search engine

3.3.1 Beverage buttons

Espresso button

touch briefly → 1x espresso
touch and hold → 2x espresso

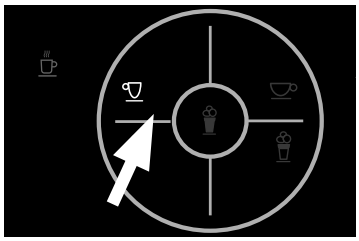

Café crème button

touch briefly → 1x café crème
touch and hold → 2x café crème

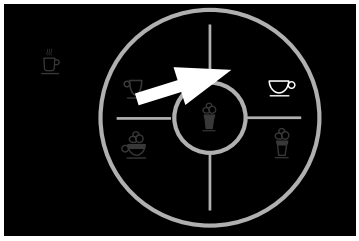

Cappuccino button

touch briefly → 1x cappuccino
touch and hold → 2x cappuccino

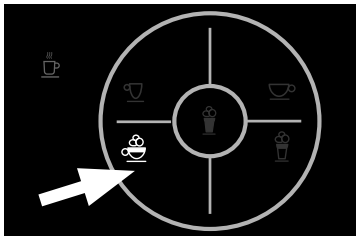

Latte macchiato button

touch briefly → 1x latte macchiato

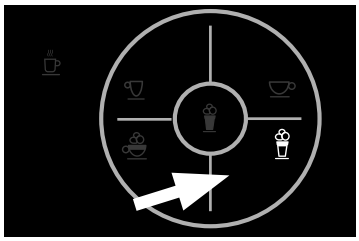

Milk button

touch briefly → 1 serving of milk
touch and hold → Milk foam

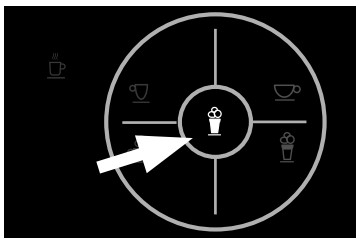

Hot water button

touch briefly → 1 serving of hot water
touch and hold → Hot water dispensing continues for as long as the pad is held.

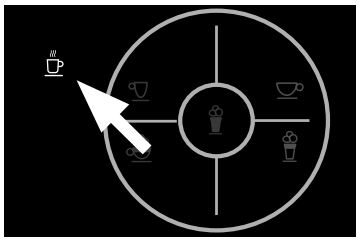

Downloaded from www.Manualslib.com manuals search engine

3.4 Dispense milk or milk foam

3.4.1 Warm milk

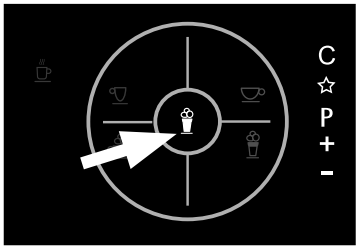

✻ Place a suitably sized cup under the All-in-One spout
✻ Push All-in-One spout all the way up
✻ Touch the milk button

A cup of warm milk is dispensed.

✻ After the milk is dispensed, slide the All-in-One spout down a little bit

3.4.2 Milk foam

✻ Place a suitably sized cup under the All-in-One spout
✻ Touch and hold the milk button

Dispensing continues for as long as the button is held.

TIP

Milk can drip out after dispensing.
> Allow the cup to rest for a moment after dispensing a beverage, or place a collection container under the All-in-One spout.
> Slide the All-in-One spout upward slightly after beverage dispensing, so that less milk drips out.

3.5 Hot water dispensing

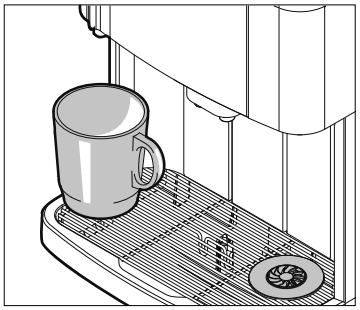

The set hot water volume is dispensed.

✻ Place a suitably sized cup under the hot water spout
✻ Touch the hot water button

Dispensing takes place according to the settings.

Dispense a variable amount of hot water

✻ Place a suitably sized cup under the hot water spout
✻ Touch and hold the hot water button

Dispensing continues for as long as the button is held.

Downloaded from www.Manualslib.com manuals search engine

3.6 Height adjustment of the All-in-One spout

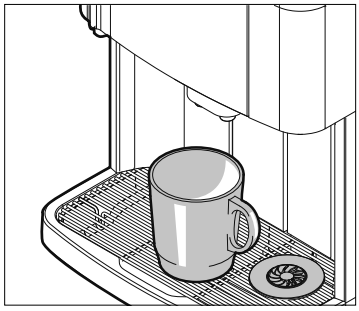

The All-in-One spout is height adjustable.

✻ Take the combi spout from the front and push to the desired height

3.7 SteamJet cup warmer

Burn hazard. Scalding hazard.

- Hot steam is produced by the cup warmer.
- The adjacent surfaces also become hot.

> Always place a cup upside-down over the cup warmer before dispensing steam.

> Do not touch the adjacent surfaces immediately after dispensing.

> Do not touch the spouts immediately after dispensing.

> Never use the SteamJet function without the drip tray grid in place or without the cup warmer insert.

⚠ CAUTION

Observe the Safety chapter
▷ starting on page 76

Clean drip tray daily
▷ Care page 60

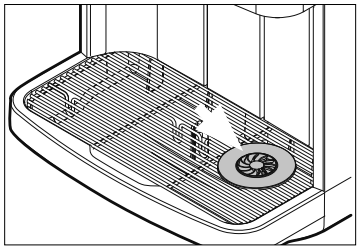

✻ Place a cup on the cup warmer with the opening facing downward

✻ Touch and hold ☆ for longer than 2 seconds

Hot steam slowly flows into the cup from below.

The steam flow stops automatically when the star pad is released, or after 8 seconds.

Downloaded from www.Manualslib.com manuals search engine

3.8 Coffee strength for the next beverage

normal (according to your setting)
strong
✻ Touch + twice
The display shows strong *.*
The next coffee will be approx. 15 % stronger when dispensed.
mild
✻ Touch - twice
The display shows mild *.*
The next coffee will be approx. 15 % weaker when dispensed.

3.9 Cup volume for the next beverage

normal (according to your setting)
large
✻ Touch and hold + for longer than 2 seconds
The display shows normal *.*
✻ Touch +
The display shows large *.*
The cup volume is increased by approx. 30 %.
small
✻ Touch and hold - for longer than 2 seconds
The display shows normal *.*
✻ Touch -
The display shows small *.*
The cup volume is reduced by approx. 30 %.

3.10 Pot function for café crème

Use the pot function to dispense several cups of café crème at once.
✻ Push All-in-One spout all the way up
✻ Place a suitably sized pot under the All-in-One spout
✻ Touch and hold + for longer than 2 seconds
✻ Touch + twice

```
place pot
  OK: P
```

✻ Start the pot function with P
✻ Follow the display messages

Please note:

the coffee for the pot function is brewed as up to 4 portions, depending on the strength and amount of the coffee. Leave the pot in place until all brewing cycles have finished, and the "Ready to operate" display appears again.

Downloaded from www.Manualslib.com manuals search engine

3.11 Bean hopper

Fill the hoppers no more than the amount needed for one day in order to maintain the freshness of the products.

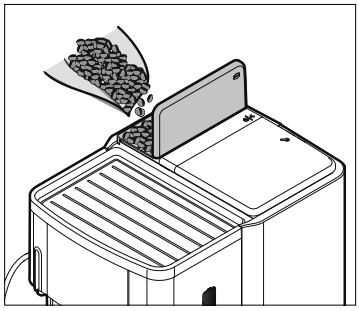

3.12 Manual insert

- When using additional ground coffee types, such as decaffeinated coffee
- For inserting cleaning tablets

Intended use
▷ *Safety page 81*

> Add ground coffee or cleaning tablet only after the display message.
> Insert no more than 15 g of ground coffee per brewing cycle.
> Use only ground coffee in the manual insert.
- Do not use water-soluble powdered coffee.
- Do not use coffee that is ground too finely.

IMPORTANT

Consult the warranty / guarantee section
▷ *from page 83*

Preparation using the manual insert

✻ Place a suitably sized cup under the All-in-One spout
✻ Open the manual insert lid

The display shows:

```
insert ground coffee
  select beverage
```

✻ Insert ground coffee (max. 15 g)
✻ Close the manual insert lid
✻ Touch the desired beverage button

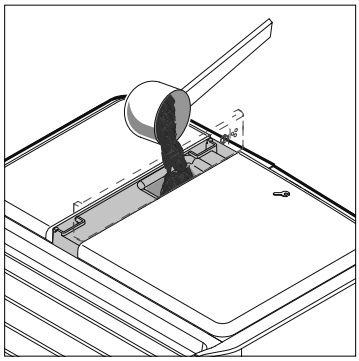

Manual insert

Cancel beverage dispensing

✻ Touch C

Downloaded from www.Manualslib.com manuals search engine

3.13 Grounds container

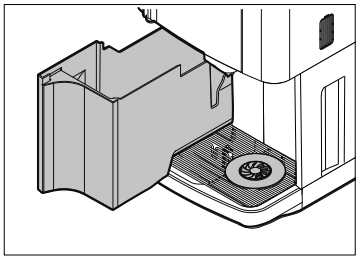

The grounds container receives the used coffee grounds. The display shows a message as soon as the grounds container needs to be emptied.
Beverage dispensing is blocked for as long as the grounds container is removed.

Clean the grounds container
▷ *Care page 60*

✻ Push All-in-One spout all the way up
✻ Remove, empty, and reinsert the grounds container
✻ Confirm process on the display

IMPORTANT

> If grounds container cannot be replaced, check chute for coffee residue and remove.
> Do not pinch the milk hose when inserting.
> Always empty the grounds container before replacing.

Replacing without emptying results in the coffee grounds container being overfilled. The coffee machine will be soiled. This may cause subsequent damage to the machine.

Consult the warranty / guarantee section
▷ *from page 83*

3.14 Drip tray

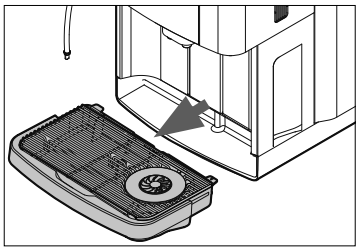

The drip tray must be emptied regularly.
✻ Remove the drip tray carefully, empty it, and then reinsert the drip tray

⚠ CAUTION

Scalding hazard.
- The drip tray may contain hot liquids.

> Move the drip tray carefully.
> Replace carefully so that no water accidentally drips down.

Observe the Safety chapter
▷ *starting on page 76*

Clean drip tray daily
▷ *Care page 60*

Downloaded from www.Manualslib.com manuals search engine

3.15 Switch-off the coffee machine

Take care to work hygienically.
- Germs that are hazardous to health can grow in the coffee machine.

> Perform daily cleaning before switching off the coffee machine.

⚠ CAUTION

Observe the Safety chapter
▷ starting on page 76

Clean the coffee machine as shown in the manual.

Care
▷ starting on page 48

✻ Press the ON/OFF button for longer than 3 seconds until the coffee machine switches off
✻ Disconnect mains plug

Follow the manual.
If this is not observed, the liability is invalidated in the event of any resultant damage.

IMPORTANT

Consult the warranty / guarantee section
▷ from page 83

Downloaded from www.Manualslib.com manuals search engine

Chapter 4 Settings

Access settings

✻ Briefly touch **P**

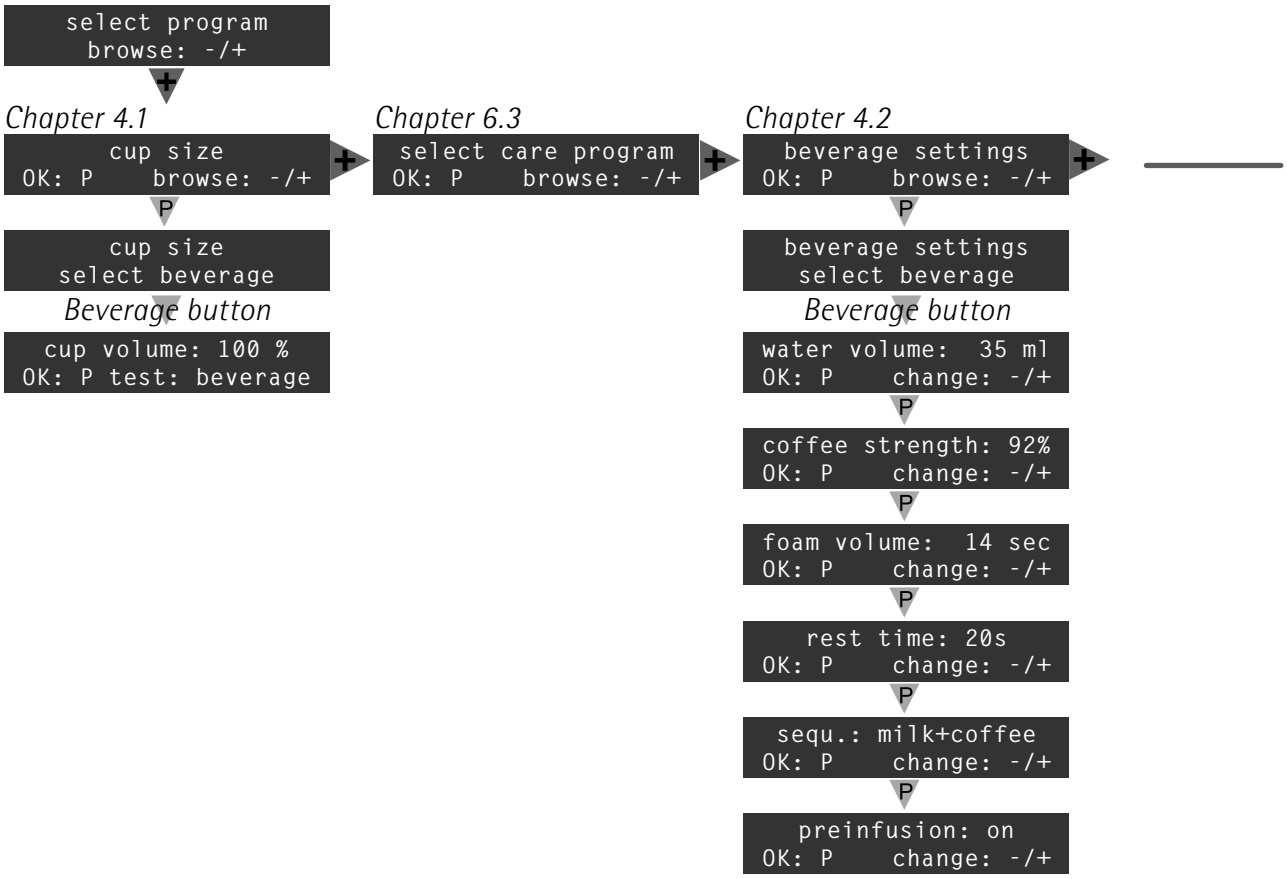

Downloaded from www.Manualslib.com manuals search engine

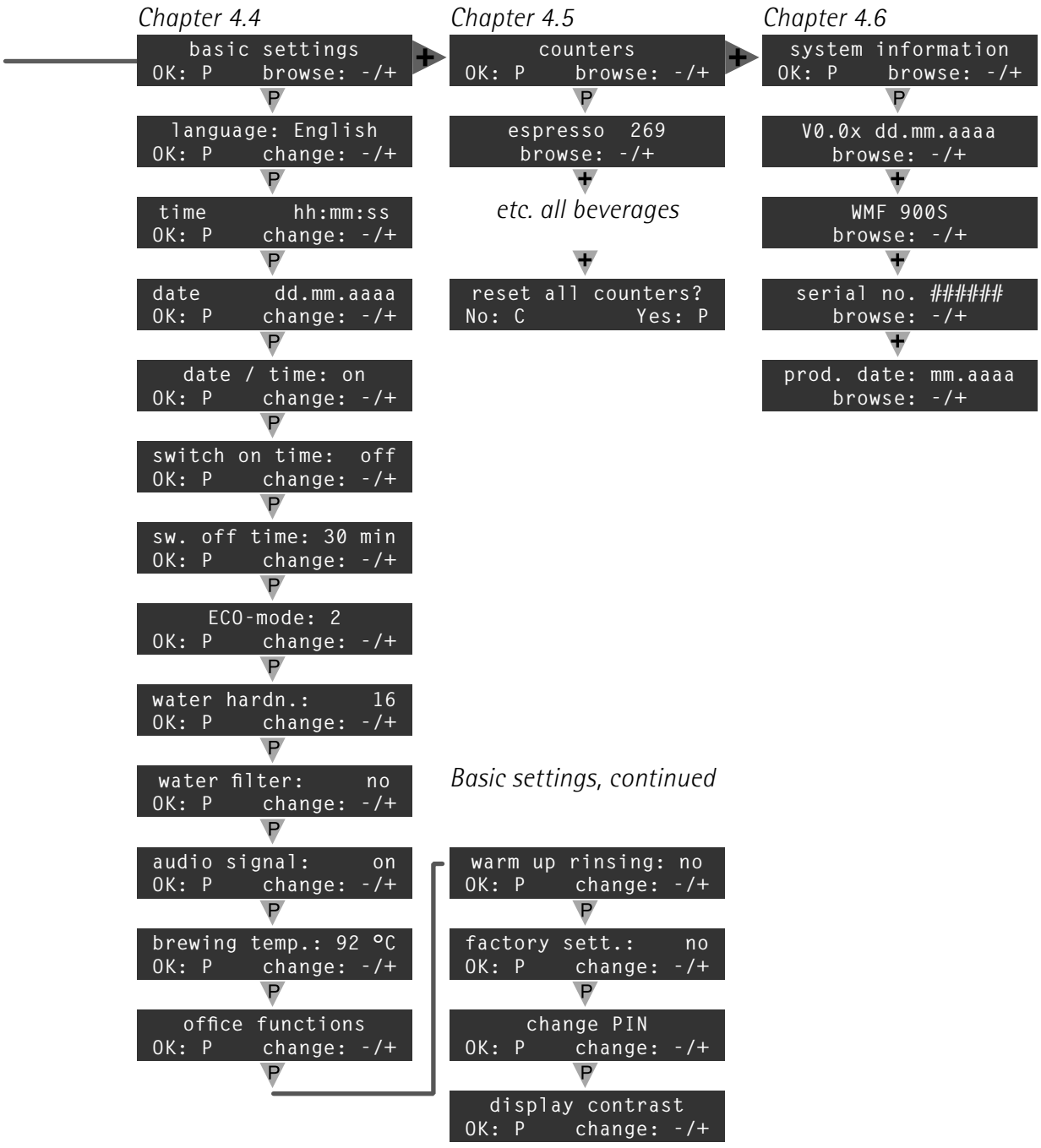

Downloaded from www.Manualslib.com manuals search engine

4.1 Cup volumes (cup size)

The coffee machine adjusts the recipe quantities to the new cup volume.

```
select program
browse: -/+
```

✻ Briefly touch **P**

Beverage setting ▷ page 31

```
cup size
select beverage
```

✻ Browse through with **+** to cup size
✻ Select the program with **P**

```
cup volume: 100 %
OK: P test: beverage
```

✻ Select the beverage for which the cup volume should be adjusted to the cup size

Adjust the cup volume with **-** and **+**.

The cup volume is displayed in %. 100 % corresponds to the factory setting.

The PIN is requested prior to this action, if the PIN function is active.

Activate PIN function ▷ page 41

✻ If necessary, the new setting can be tested with a dispensing test
✻ As soon as the cup volume is set as desired, confirm the values with **P**

4.1.1 Dispensing test

✻ Touch the desired beverage button

The beverage is dispensed using the newly changed values.

TIP

Each beverage setting can be tested during setup.

Downloaded from www.Manualslib.com manuals search engine

4.2 Beverage setting

- Water volume
- Coffee strength
- Milk foam volume *
- Rest time
- Sequence of milk and coffee dispensing *
- Pre-infusion (aroma development)

** Option only available for beverages with milk*

Adjustments can be made only to the additions that are available for this beverage.

C	P	−	+
C pad	**P pad**	**Minus pad**	**Plus pad**
Cancel	*Confirm values*	*Set the values*	*Set the values*
	Menu control		

The new values are saved when you exit the program.

4.2.1 Dispensing test

✻ Place a suitably sized cup under the All-in-One spout
✻ Touch the desired beverage button

The beverage is dispensed using the newly changed values.

Each beverage setting can be tested during setup.

TIP

4.2.2 Access beverage settings

```
select program
 browse: -/+
```

✻ Briefly touch P

```
 beverage settings
OK: P    browse: -/+
```

✻ Browse through with + to beverage settings
✻ Select the program with P
✻ Select the beverage for which the taste and composition should be set

The PIN is requested prior to this action, if the PIN function is active.

Activate PIN function
▷ *page 41*

Downloaded from www.Manualslib.com manuals search engine

4.2.3 Water volume

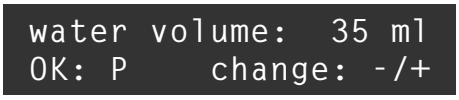

Dispensing test ▷ page 31

- ✻ Touch and hold **+** and **-** until the water quantity is set as desired
- ✻ Start a dispensing test with the current values
- ✻ As soon as the beverage is set as desired, confirm the values with **P**

4.2.4 Coffee strength

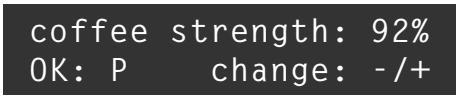

The grinding quantity varies depending on the grinding degree setting, the type of coffee used, the humidity, and various other factors.

- ✻ Set the value as desired
- ✻ Start a dispensing test with the current values
- ✻ As soon as the beverage is set as desired, confirm the values with **P**

4.2.5 Milk foam volume

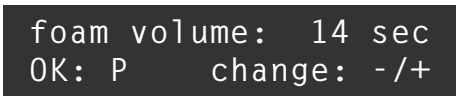

Adjustments can be made only to the additions that are available for this beverage.

Setting in seconds.
Only available for beverages with milk foam.
The milk foam volume depends on the milk used, the milk temperature and the milk nozzle selected.

- ✻ Set the value as desired
- ✻ Start a dispensing test with the current values
- ✻ As soon as the beverage is set as desired, confirm the values with **P**

4.2.6 Rest time



Dispensing test ▷ page 31

Setting for latte macchiato. The separation between the milk and espresso in a latte macchiato will work better if the rest time between dispensing the milk or milk foam and dispensing the coffee is extended.

- ✻ Set the value as desired
- ✻ Start a dispensing test with the current values
- ✻ As soon as the beverage is set as desired, confirm the values with **P**

Downloaded from www.Manualslib.com manuals search engine

4.2.7 Sequence of dispensing

First milk, then coffee / first coffee, then milk / milk and coffee at the same time.

```
 sequ.: milk+coffee
OK: P    change: -/+
```

The setting for the sequence of beverage dispensing is only offered for beverages with milk components.
Exception: latte macchiato

- ✻ Set as desired
- ✻ Start a dispensing test with the current values
- ✻ As soon as the beverage is set as desired, confirm the values with **P**

4.2.8 Pre-infusion

```
  preinfusion: on
OK: P    change: -/+
```

The pre-infusion function is set to **on** *at the factory for all coffee beverages except café crème.*

Before brewing, the ground coffee is wetted with hot water. This causes the ground coffee to swell up, enabling the aroma of many types of coffee to develop better.

- ✻ Set as desired
- ✻ Start a dispensing test with the current values
- ✻ As soon as the beverage is set as desired, confirm the values with **P**

Downloaded from www.Manualslib.com manuals search engine

4.3 User profiles

It is possible to adjust this setting on the WMF 900 sensor plus the version of the coffee machine.

The WMF 900 sensor plus can manage three individual user profiles, in addition to the standard user profile.



If the PIN function is active, the PIN will be requested before entering or processing a user profile.

Activate PIN function ▷ page 41

4.3.1 Name the user profile

```
select program
 browse: -/+
```

✻ Briefly touch **P**

```
beverage settings
OK: P    browse: -/+
```

✻ Browse through with **+** to beverage settings
✻ Select the program with **P**

```
profil: Person 1
OK: P    browse: -/+
```

✻ Use **+** to browse to the desired user profile
The example shows the profile: Person 1.
✻ Select the displayed user profile with **P**

```
name: A
OK: P    change: -/+
```

✻ Use **+** and **-** to search for the desired letters
✻ Use **P** to select the displayed letter
✻ Select the next letter, etc.
The name may have up to 11 characters.
✻ Confirm the entire profile name with **P**
The beverage settings for the indicated user profile are started.

Beverage setting ▷ page 31

Downloaded from www.Manualslib.com manuals search engine

4.3.2 Set up the user profile

```
select program
 browse: -/+
```

✻ Briefly touch **P**

```
 beverage settings
OK: P    browse: -/+
```

✻ Browse through with **+** to beverage settings
✻ Select the program with **P**

```
  profil: Person 1
OK: P    browse: -/+
```

✻ Use **+** to browse to the desired user profile
The example shows the profile of Person 1.

```
  Name: Person 1
OK: P    browse: -/+
```

✻ Select the displayed user profile with **P**
The name of the profile is displayed.
✻ Confirm with **P**

```
 beverage settings
 select beverage
```

✻ Select the beverage for which the taste and composition should be set
The beverage settings then appear for the selected user profile.

Beverage setting ▷ page 31

4.3.3 Dispense beverages using the user profile

```
your selection pls
     Profil: 1
```

✻ Briefly touch ☆
The first user profile is displayed.
✻ Use ☆ to browse to the desired user profile
✻ Touch the desired beverage button
The beverage is then dispensed using the settings for the selected user profile.

The selected user profile remains active for 10 seconds. Select the beverage within this time period.

Downloaded from www.Manualslib.com manuals search engine

4.3.4 Restore the user profile to the standard settings



✻ Briefly touch **P**



✻ Browse through with **+** to beverage settings
✻ Select the program with **P**



✻ Use **-** to browse to Reset profile
✻ Use **P** to select Reset profile



✻ Use **+** to browse to the profile to be reset
The example shows the profile: Person 2
✻ Select the displayed user profile by touching **P**



Confirmation is requested that the user profile really should be reset.



Save user profile -> Touch **C**
Reset user profile -> Touch **P**



Downloaded from www.Manualslib.com manuals search engine

4.4 Basic settings

- Language
- Time
- Date
- Date / time (display)
- Switch-on time
- Switch-off time
- ECO-mode
- Water hardness
- Water filter
- Audio signal
- Brewing temperature
- Office functions
- Warm rinsing
- Factory settings
- Change PIN
- Display contrast

C	P	-	+
C pad	**P pad**	**Minus pad**	**Plus pad**
Cancel	*Confirm values* *Menu control*	*Set the values*	*Set the values*

The new values are saved when you exit the program.

4.4.1 Access basic settings

```
select program
 browse: -/+
```

✻ Briefly touch P

```
  basic settings
OK: P   browse: -/+
```

✻ Browse through with + to basic settings
✻ Select the program with P
The first setting option appears automatically. Briefly touch P to see the additional settings.

The PIN is requested prior to this action, if the PIN function is active.

Activate PIN function
▷ *page 41*

4.4.2 Language

```
 language: english
OK: P   change: -/+
```

✻ Touch + to set the desired language
✻ Confirm the desired setting with P

Downloaded from www.Manualslib.com manuals search engine

4.4.3 Time

```
 time        hh:mm:ss
OK: P     change: -/+
```

The current time.

hh = hour (two places)

mm = minutes (two places)

ss = seconds (two places)

✻ Confirm the desired setting with P

4.4.4 Date

```
date       dd.mm.aaaa
OK: P     change: -/+
```

The current date.

dd = day (two places)

mm = month (two places)

aaaa = year (four places)

✻ Confirm the desired setting with P

4.4.5 Date / time (display)

```
   date / time: on
OK: P     change: -/+
```

If set to on, the time and date are shown on the display during operation.

✻ Confirm the desired setting with P

4.4.6 Switch-on time

```
switch on time:  off
OK: P     change: -/+
```

If a switch-on time is set, it must be confirmed when the coffee machine is switched off.

Automatic switch-on time for the coffee machine.

If set to off, the coffee machine will not be switched on automatically.

If the coffee machine is not used for more than one hour after switching on automatically, the coffee machine will switch off again.

The switch-on time is set to off.

✻ Use + and - to set the clock

✻ Confirm the desired setting with P

4.4.7 Switch-off time

```
sw. off time: 30 min
OK: P     change: -/+
```

If switch-on time is activated, the coffee machine switches on again at the set switch-on time.

Automatic switch-off time in minutes after the last beverage dispensing.

If set to 0 min the coffee machine does not shut off automatically.

✻ Confirm the desired setting with P

It cannot be set between 0 and 5 minutes.

Downloaded from www.Manualslib.com manuals search engine

4.4.8 Eco-mode



The Eco-mode settings can be used to reduce energy consumption for light use.

✻ Confirm the desired setting with **P**

Standard Eco-mode setting: 2

ECO-Mode	**Hot water boiler** For coffee beverages and hot water	**Steam boiler** For milk beverages
1	Ready to operate: always, immediately.	Ready to operate: always, immediately.
2	Ready to operate: always, immediately.	Temperature is reduced 5 minutes after the last beverage. After the temperature has been reduced, it must be heated up before the next beverage is dispensed. Heating duration approx. 15 seconds.
3	Temperature is reduced 5 minutes after the last beverage. After the temperature has been reduced, it must be heated up before the next beverage is dispensed. Heating duration approx. 15 seconds.	Temperature is reduced 5 minutes after the last beverage. After the temperature has been reduced, it must be heated up before the next beverage is dispensed. Heating duration approx. 15 seconds.
4	Temperature is reduced 5 minutes after the last beverage. After the temperature has been reduced, it must be heated up before the next beverage is dispensed. Heating duration approx. 15 seconds.	Always switched off. For dispensing pure coffee, without milk beverages.

Downloaded from www.Manualslib.com manuals search engine

4.4.9 Water hardness



Carbonate hardness test
▷ *Included accessories*

The hardness of the water being used.
Enter the result of the carbonate hardness test here.
✻ Confirm the desired setting with P

4.4.10 Water filter



Insert water filter
▷ *page 12*

If the water filter is set to 100 l or 200 l then the filter should be rinsed now.

100 l = water filter for 100 liters of water
200 l = water filter for 200 liters of water
no = no water filter

Capacity shown applies for 10 °dKH.

4.4.11 Audio signal



✻ Confirm the desired setting with P

4.4.12 Brewing temperature



Boiler temperature in °C
(brewing water temperature).
(Standard setting 92 °C)
✻ Confirm the desired setting with P

4.4.13 Office functions



The Office function is used to set the cleaning frequency.
✻ Press +

Cleaning interval



It can be set to standard, for household use and monthly machine cleaning, or office, recommended for commercial use and daily machine cleaning.
✻ Confirm the desired setting with P

Downloaded from www.Manualslib.com manuals search engine

Activate PIN function



Change PIN
▷ *page 42*

In order to activate the PIN function, yes must be set here.
The PIN is requested only if the function has been activated here. The standard setting is no.
The correct PIN must be entered after activation.
If the PIN has not yet been changed, then the standard PIN 00000 is still valid.
✻ Confirm the desired setting with P

4.4.14 Warm rinsing



If set to yes then a warm-up rinse is performed before the next espresso is dispensed if nothing has been dispensed for over 10 minutes.
The warm-up rinsing can be skipped.
✻ Confirm the desired setting with P

4.4.15 Factory settings



All individual settings are lost if you reset to the factory settings.

If set to yes all beverage settings are reset to the factory settings.
✻ Confirm the desired setting with P

Downloaded from www.Manualslib.com manuals search engine

4.4.16 Change PIN

The menu is available only if the PIN function is active.

Activate PIN function
▷ *page 41*

```
    change PIN
OK: P    change: -/+
```

✻ Press **P**

```
  old PIN: #####
OK: P         end: C
```

✻ Enter the correct PIN
If the PIN has not yet been changed, then the standard PIN 00000 is still valid.
✻ Enter any new 5-digit PIN using the beverage buttons
✻ Confirm the desired setting with **P**

The assigned PIN is requested prior to making the following settings:

- Cup size ▷page 30
- Beverage setting ▷page 31
- User profiles ▷page 34
- Basic settings ▷page 37
- Delete counters ▷page 43

Use beverage buttons to enter the digits

0 Hot water
1 Espresso
2 Café crème
3 Cappuccino
4 Latte macchiato
5 Milk

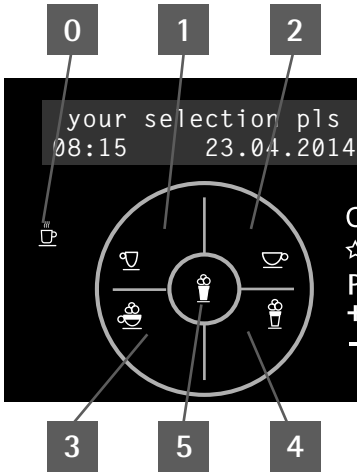

4.4.17 Display contrast

```
  display contrast
OK: P    change: -/+
```

Display contrast is set here.
✻ Confirm the desired setting with **P**

Downloaded from www.Manualslib.com manuals search engine

4.5 Counters



✻ Briefly touch P

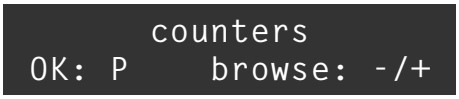

✻ Browse through with + to counters
✻ Select the program with P

Example espresso:



✻ Confirm the counter display with P
The number of dispensed beverages is displayed.
✻ Use + to browse through the individual beverages



As soon as all beverages have been displayed, the question of whether the counter should be reset is presented.

The PIN is requested prior to this action, if the PIN function is active.

Activate PIN function
▷ *page 41*

Keep counter settings
✻ Touch C

Delete counters
✻ Touch P

Downloaded from www.Manualslib.com manuals search engine

4.6 System information



✻ Briefly touch **P**



✻ Browse through with **+** to system information
✻ Select the program with **P**

4.6.1 Software version

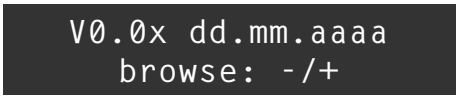

The software version and date are shown.

4.6.2 Device name



The name and type of the device are displayed.

4.6.3 Machine number

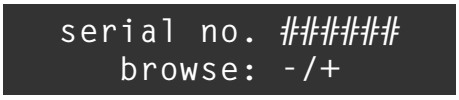

The 6-digit machine number is shown.

4.6.4 Date of production



The date of production is shown.

Downloaded from www.Manualslib.com manuals search engine

Chapter 5 Other settings

5.1 Set grinding degree

Bruising or crushing hazard. Risk of injury.
> The coffee grinder contains moving parts that can cause finger injury.
> Never reach into the coffee grinder.

⚠ CAUTION

Observe the Safety chapter ▷ starting on page 76

✻ Open the bean hopper lid
✻ Place the multitool on the grinding degree setting screw
✻ Touch the hot espresso button
✻ Wait until the grinder starts up

Adjust the grinding degree to a finer setting only while the grinder is running, as otherwise damage may result.

✻ Press down with the multitool and set the grinding degree as desired while the grinder is running

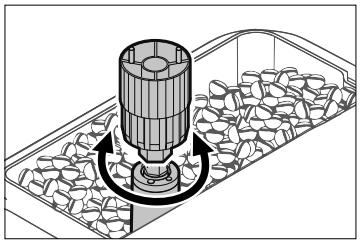

Finer grinding degree → ↺ (counter clockwise)

Set to one degree finer, at most.

Coarser grinding degree → ↻ (clockwise)

Test the new grinding degree setting

Test the new grinding degree setting dispensing two cups of espresso. The effect of the grinding degree setting can only be determined after the second beverage is dispensed, following a change in the setting.

5.1.1 Incorrect grinding degree setting

Grinding degree too fine

- The dispensing stream is interrupted, and/or there is a flow error. The ground coffee clogs the brewing sieve.

✻ Set grinding degree one stage coarser

Grinding degree too coarse

- The coffee comes out too fast, especially for espresso; the crema is too light and does not last; the aroma is flat.

✻ Set grinding degree one stage finer

Downloaded from www.Manualslib.com manuals search engine

Chapter 6 Care

6.1 Care safety instructions

Regular cleaning is essential in order to ensure problem-free operation of the coffee machine and to ensure optimum coffee quality.

Health hazard. Hygiene.

- Milk is very sensitive. Germs that can pose a health hazard can build up in the milk system.

> When the message appears on the display, perform a milk system rinsing on the Connect & Clean.

> Also clean the All-in-One spout manually once a week after the close of business.

> Change the milk hose at regular intervals.

> Follow all hygiene instructions.

> Follow the HACCP cleaning schedule.

⚠ CAUTION

Observe the Safety chapter
▷ starting on page 76

Health hazard. Hygiene.

- Germs can multiply in a coffee machine that is not in use.

> Prior to and after every instance that the machine is shut off for several days, perform all cleanings.

⚠ CAUTION

Observe the Safety chapter
▷ starting on page 76

Health hazard. Hygiene.

- All cleaning agents are perfectly tuned to the cleaning programs.

> Use only WMF cleaning and descaling media.

⚠ CAUTION

Observe the Safety chapter
▷ starting on page 76

Downloaded from www.Manualslib.com manuals search engine

Health hazard.
Irritation and scalding hazard.

- During cleaning and descaling, hot cleaning solution or descaling solution flows out of the All-in-One spout.
- The hot liquids can irritate the skin, and the heat poses a burn hazard.

> Never reach under the spouts while cleaning or descaling.

> Ensure that no one ever drinks the cleaning solution or descaling solution.

⚠ CAUTION

Observe the Safety chapter
▷ starting on page 76

Never clean the coffee machine parts in the dishwasher.

IMPORTANT

Consult the warranty / guarantee section
▷ from page 83

Downloaded from www.Manualslib.com manuals search engine

6.2 Cleaning intervals overview

Care						
Daily	*Weekly*	*Regularly*	*Message*	*Optional*		
Care programs						
			x		Connect & Clean milk system rinsing	▷ *page 49*
			x		Machine cleaning	▷ *page 52*
			x	O	Change water filter	▷ *page 54*
			x		Descaling	▷ *page 55*
Manual cleaning						
x					Clean the grounds container	▷ *page 60*
x					Clean the drip tray	
x					Clean the cup warmer	
x					Clean the housing	▷ *page 61*
	x				Clean the water tank	
		x			Clean the bean hopper	
			x		Clean the milk system	▷ *page 62*
		x			Clean the brewing unit and brewing chamber	▷ *page 65*
		x			Clean the steam nozzle	▷ *page 59*

Daily = Daily, at least once per day and as required
Weekly = Weekly cleaning
Regularly = Regularly as required
Message = After the display shows a message
Optional = Optional (depending on the model)
(x) = Daily as required

Downloaded from www.Manualslib.com manuals search engine

6.3 Start care programs



✻ Select programs with **P**



✻ Browse through with **+** to the desired program



✻ Select the desired program with **P**

6.4 Connect & Clean milk system rinsing

20 minutes after the last beverage with milk is dispensed, a message appears requesting a milk system rinsing.

Start care programs
▷ page 49

TIP

If a milk beverage has been dispensed, you will be requested to perform a milk system rinsing 20 minutes after dispensing, or when switching off.
The milk system rinsing does not need to be initiated separately using the customer care program.

6.4.1 Clean the milk system

The milk system consists of:
- All-in-One spout with air intake pipe and cap
- Milk nozzle
- Milk hose

⚠ CAUTION

Health hazard. Hygiene.
- Milk is very sensitive. Germs that can pose a health hazard can build up in the milk system.

> Follow all hygiene instructions.
> Valid for commercial use:
Follow the HACCP cleaning schedule.

Observe the safety instructions for cleaning
▷ starting on page 46

Downloaded from www.Manualslib.com manuals search engine

Milk system cleaning

Milk system cleaning consists of two parts.
- Display-guided milk system rinsing
- **Weekly** Place the All-in-One spout, the milk hose, and the milk nozzles in cleaning solution

Connect & Clean milk system rinsing

Scalding hazard.
- If the milk hose has not been threaded onto the milk nozzle all the way to the stop, or if it is kinked or pinched, then the milk hose may come loose during the milk system rinsing.
> Always thread the milk hose over the milk nozzle all the way to the stop.
> Always insert the milk hose into the guide with care.
> Do not kink or pinch the milk hose.

⚠ CAUTION

Observe the Safety chapter
▷ starting on page 76

✻ Start care programs
✻ Start milk system rinsing with P

```
 milk system rinsing
OK: P    browse: -/+
```

The display shows the individual steps that must be completed prior to rinsing.
✻ Push All-in-One spout all the way up
✻ Place a collection container under the All-in-One spout
✻ Wipe off the outside of the milk hose with a clean, damp cloth
✻ Connect the milk hose with the milk nozzle to the hot water spout [1]
✻ Turn the milk hose clockwise, until it stops [2]

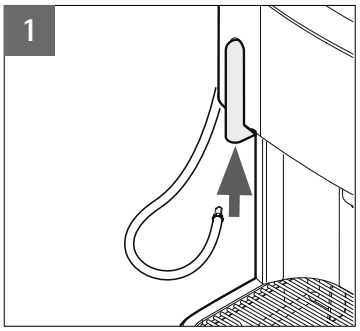

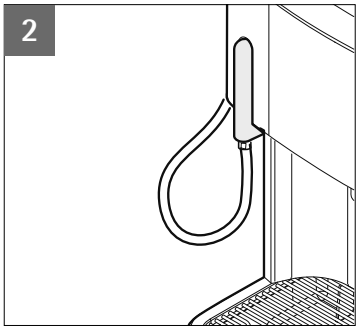

Downloaded from www.Manualslib.com manuals search engine

Health hazard. Scalding hazard.

- During rinsing, hot rinsing water flows out of the All-in-One spout.

> Never reach under the spouts while rinsing.

⚠ CAUTION

Observe the Safety chapter
▷ starting on page 76

✻ Touch P

Milk system rinsing starts.

The milk system is rinsed using hot water. Rinse water is drained through the All-in-One spout. Clean the All-in-One spout with a steam jet.

✻ Hold the milk hose with the milk nozzle over the drip tray after rinsing, so that the remaining hot water can run out

Downloaded from www.Manualslib.com manuals search engine

6.5 Machine cleaning

• Time of message	Perform the machine cleaning routine when the message appears on the display.
• Postpone cleaning	dispense one beverage
• Number of brewing cycles allowed after the first message before beverages are blocked	30 brewing cycles, no more than two days later
• Remove beverage block	perform cleaning

⚠ CAUTION

Observe the Safety chapter ▷ starting on page 76

Health hazard.
Irritation and scalding hazard.

- During cleaning and descaling, hot cleaning solution or descaling solution flows out of the All-in-One spout.
- The hot liquids can irritate the skin, and the heat poses a burn hazard.

> Never reach under the spouts while cleaning or descaling.

> Ensure that no one ever drinks the cleaning solution or descaling solution.

TIP

The cleaning program provides a step-by-step guide through the machine cleaning on the display.
Follow the messages.

Downloaded from www.Manualslib.com manuals search engine

✻ Start care programs
✻ Browse through with + to machine cleaning

```
machine cleaning
OK: P    browse: -/+
```

✻ Touch P

The cleaning program starts.

✻ Follow the display messages

```
empty drip tray
```

```
fill the water tank
```

```
place 3L container
under the spouts
OK: P
```

```
insert tablet
into manual insert
```

```
start: P
```

Machine cleaning starts. Duration approx. 7 minutes.
A minute countdown timer shows the time remaining in the cleaning cycle.
After cleaning, the display requests a manual milk system cleaning.
This message disappears with the C pad is touched C.

Start care programs
▷ page 49

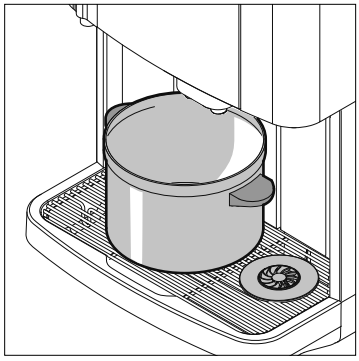

3-liter container below the All-in-One spout

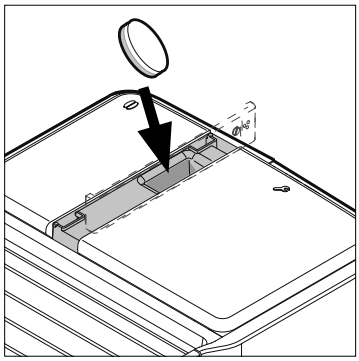

Manual insert

Start care programs
▷ page 49

Milk system cleaning
▷ page 50

Downloaded from www.Manualslib.com manuals search engine

6.6 Change water filter

Depending on the water hardness and flow rate, but definitely no later than every 3 months, the display shows the message change water filter .

If a new water filter is not being used, then the water filter must be deactivated in the basic settings.
In this case, be sure to remove the old water filter and the water filter adapter. Attach the water discharge screen again.

Insert water filter
▷ *page 12*
Water filter
▷ *Settings*
▷ *page 40*

Postpone the filter change

✻ Touch C
When the remaining capacity is 5 liters, the coffee machine displays a countdown until beverages will be locked out. Further beverage dispensing is then blocked. Beverage lockout is removed after a filter change.

Change water filter

✻ Start care programs
✻ Browse through with + to filter change

Start and select care programs
▷ *page 49*

```
   filter exchange
OK: P    browse: -/+
```

✻ Touch P
Filter change starts.

```
  remove water tank
```

✻ Remove water tank

```
  remove old filter
  place new filter
```

✻ Replace the old water filter with a new one

Insert water filter
▷ *Start-up*
page 12

Downloaded from www.Manualslib.com manuals search engine

✻ Fill the water tank with clean cold drinking water
✻ Place the lid on the water tank
✻ Insert the water tank carefully
✻ Touch P
✻ Place a collection container with 3 liters capacity under the hot water spout
✻ Touch P

Filter rinsing starts.

Rinse water filter

```
filter rinsing
```

Filter rinsing starts. Duration approx. 4 minutes.

```
rinsing filter ...
time remain: 4 min
```

A minute countdown timer shows the time remaining in the rinsing cycle.
When rinsing the filter, you will hear unusual noises.
This is normal.
The noises will end during the filter rinsing.

6.7 Descaling

Total duration of descaling is approx. 40 minutes. The procedure may not be interrupted.

The water hardness, the water flow, and whether a water filter is used determine the schedule for descaling.

• Time of message	Calculated by the coffee machine and shown on the display.
• Postpone descaling	✻ Touch C
• Number of brewing cycles allowed after the first message before beverages are blocked	50 brewing cycles
• Remove beverage block	✻ Perform a descaling

Downloaded from www.Manualslib.com manuals search engine

Health hazard.
Irritation and scalding hazard.

- During cleaning and descaling, hot cleaning solution or descaling solution flows out of the All-in-One spout.
- The hot liquids can irritate the skin, and the heat poses a burn hazard.

> Never reach under the spouts while cleaning or descaling.

> Ensure that no one ever drinks the cleaning solution or descaling solution.

⚠ CAUTION

Observe the Safety chapter
▷ starting on page 76

- WMF care products are designed and tested for use with the materials. Any other descaling agent may cause damage to the coffee machine.

> Use only WMF Descaling Agent.

No liability is accepted for damage caused by the use of any other descaling agent and guarantee / warranty claims are not entertained.

IMPORTANT

Consult the warranty / guarantee section
▷ from page 83

The following is needed for descaling:

- 1 bottle of WMF liquid descaling agent (0.75 liter)
- 3-liter collection container

Display messages lead you step by step through the program.
Follow the messages.

TIP

Downloaded from www.Manualslib.com manuals search engine

Descale

✻ Start care programs

✻ Browse through with + to machine descaling

```
  machine descaling
OK: P    browse: -/+
```

Start and select care programs
▷ *page 49*

✻ Select the desired program with P

✻ Follow the display messages

✻ Empty drip tray

✻ Remove water tank

Remove water filter

✻ If fitted, take the water filter and the water filter adapter from the water tank [1]

✻ Pour one whole bottle of WMF liquid descaling agent into the water tank

✻ Fill the water tank with water and stir

✻ If crystals have formed when stored below the freezing point, stir until all crystals present in the liquid descaling agent have dissolved

✻ Place the lid on the water tank

✻ Insert the water tank filled with the descaling solution

✻ Press the ejection lever on the back side of the All-in-One spout to loosen the milk foamer [2]

✻ Pull the milk foamer down and off [3]

Crystals may form in the liquid descaling agent when stored.

The crystals must not enter the coffee machine.

The water temperature in the tank must not exceed 25 °C.

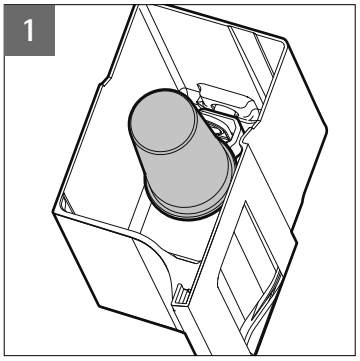

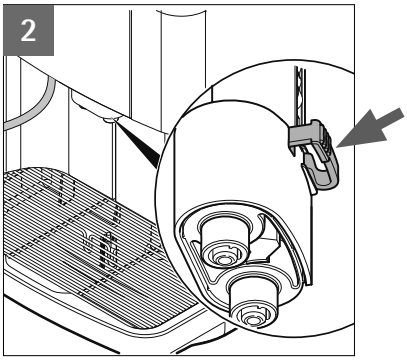

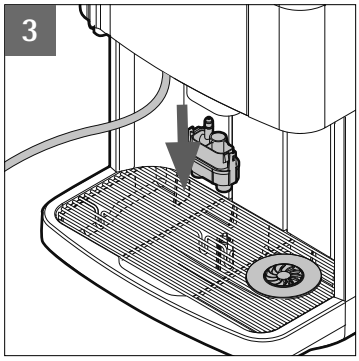

Downloaded from www.Manualslib.com manuals search engine

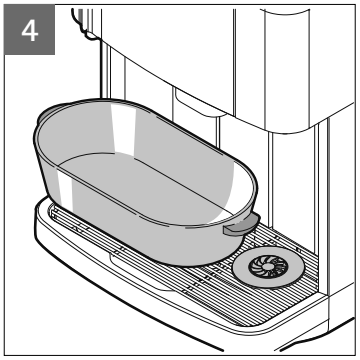

✻ Place a collection container with 3 liters capacity under the All-in-One spout and under the hot water spout [4]
✻ Touch **P**

```
   descaling ...
time remain:  37 min
```

Descaling starts and may not be interrupted. Duration approx. 40 minutes.
A minute countdown timer shows the time remaining in the descaling cycle.

After approx. 30 minutes

```
  empty water tank
```

```
  empty container
       OK: P
```

✻ Remove and empty water tank
✻ Rinse the water tank thoroughly with drinking water
✻ Touch **P**

```
 fill the water tank
       OK: P
```

✻ Fill the water tank with clean cold drinking water
✻ Place the lid on the water tank
✻ Insert the water tank carefully
✻ Touch **P**

The descaling continues.

```
   descaling ...
time remain:   1 min
```

A minute countdown timer shows the time remaining in the descaling cycle.

Insert water filter
▷ *Start-up*
▷ *page 12*

Water filter
▷ *Settings*
▷ *page 40*

Downloaded from www.Manualslib.com manuals search engine

Finish descaling

✻ Remove and empty water tank

✻ Thoroughly rinse the water tank under warm drinking water in order to remove all descaler residues

A request for machine cleaning appears immediately after descaling.

Place water filter

✻ If fitted, take the water filter adapter and the water filter from the water tank [1]

✻ Clean the steam nozzle

✻ Insert the milk foamer in the All-in-One spout from below

✻ Fill the water tank with clean cold drinking water

✻ Place the lid on the water tank

✻ Insert the water tank

Coffee machine heats up. Steam and condensate will be released.

✻ Perform a machine cleaning

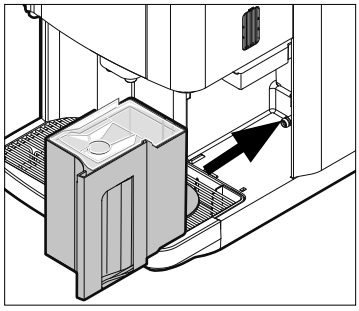

Change water filter
▷ *page 54*

▷ *Clean the steam nozzle*

Machine cleaning
▷ *page 52*

6.8 Clean the steam nozzle

✻ Press the ON/OFF button for longer than 3 seconds until the coffee machine switches off

✻ Disconnect mains plug

✻ Disassemble the milk foamer [1]

✻ Press the red steam nozzle to the left with the index finger to remove it [2]

✻ Carefully clean the steam nozzle with a small cleaning brush



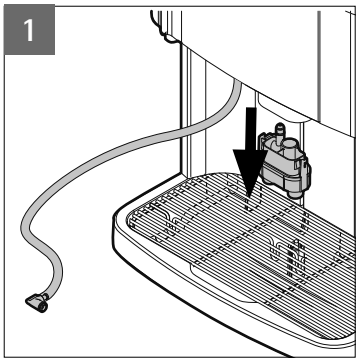

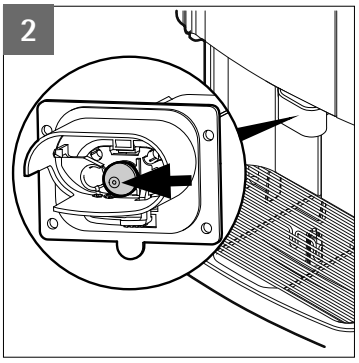

Downloaded from www.Manualslib.com manuals search engine

6.9 Clean the grounds container

✻ Empty grounds container and rinse under running water
✻ Clean the exterior surface with a damp cloth
✻ Allow the coffee grounds container to dry thoroughly

6.10 Clean the drip tray, drip tray grid, and cup warmer

✻ Remove and empty drip tray
✻ Remove the cup warmer insert
✻ Thoroughly rinse the drip tray, drip tray grid, and cup warmer insert with warm water
✻ Rinse with clean, cold drinking water
✻ Dry all parts thoroughly or allow to dry completely
✻ Reinsert the drip tray

- There is a hazard of causing scratches or scores.
  > Do not clean with scouring powders or the like.
  > Do not use any sharp cleaners or implements.
  > Use soft cloths for cleaning.

IMPORTANT

Consult the warranty / guarantee section
▷ *from page 83*

Downloaded from www.Manualslib.com manuals search engine

6.11 Clean the housing and control panel

Scalding hazard.
- If a beverage is initiated accidentally, there is a hazard of being injured.

> Always switch off using the ON/OFF button prior to cleaning.
> Disconnect mains plug.

⚠ CAUTION

Observe the Safety chapter ▷ starting on page 76

✻ Press the ON/OFF button for longer than 3 seconds until the coffee machine switches off
✻ Disconnect mains plug
✻ Clean the housing using a damp soft cloth
✻ Clean the control panel using a damp soft cloth

6.12 Clean the water tank

✻ Thoroughly rinse out the water tank weekly with warm drinking water

Severe scale deposits can be removed with WMF liquid descaling agent. After descaling, thoroughly rinse the water tank under warm drinking water in order to remove all descaler residues.

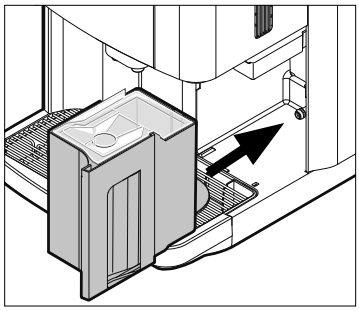

6.13 Clean the bean hopper

The bean hopper should be cleaned as required and at regular intervals.
Recommendation: monthly.

Risk of injury.
- If the grinder is initiated accidentally, there is a hazard of being injured.

> Always switch off using the ON/OFF button prior to cleaning.
> Disconnect mains plug.

⚠ CAUTION

Observe the Safety chapter ▷ starting on page 76

Downloaded from www.Manualslib.com manuals search engine

✻ Press the ON/OFF button for longer than 3 seconds until the coffee machine switches off
✻ Disconnect mains plug
✻ Clean the empty bean hopper with a dry, lint-free cloth

6.14 Release blocked grinder

Risk of injury.

- If the grinder should become jammed, never clear the blockage when the coffee machine is switched on and connected.
- Do not stick tools into the grinder.
- Never stick fingers into the grinder.

> Always switch off the coffee machine beforehand.
> Disconnect mains plug.
> Place the multitool on the grinder and turn clockwise.

Jammed coffee beans or foreign objects are moved upward and can be removed.

⚠ CAUTION

Observe the Safety chapter
▷ starting on page 76

✻ Set the grinding degree to the most coarse setting
✻ Vacuum out the bean hopper with a vacuum cleaner
✻ Remove the brewing unit and vacuum out the grinder discharge
✻ Place the multitool on the finger protector and rotate the grinder
✻ Vacuum out again with the vacuum cleaner
✻ Repeat this procedure until the foreign object has been removed
✻ Return the grinding degree to its previous position

Set grinding degree
▷ page 45

6.15 Clean the milk system

Scalding hazard.

- If a beverage is initiated accidentally, there is a hazard of being injured.

> Always switch off using the ON/OFF button prior to cleaning.
> Disconnect mains plug.

⚠ CAUTION

Observe the Safety chapter
▷ starting on page 76

Downloaded from www.Manualslib.com manuals search engine

Clean the milk system once a week for private use.
Clean daily for commercial use.

- ✻ Press the ON/OFF button for longer than 3 seconds until the coffee machine switches off
- ✻ Disconnect mains plug
- ✻ Push All-in-One spout upward
- ✻ Remove grounds container
- ✻ Remove the milk hose from the milk container
- ✻ Remove the milk hose from the guide
- ✻ Press the ejection lever on the back side of the All-in-One spout to loosen the milk foamer [1]
- ✻ Pull the milk foamer down and off [2]
- ✻ Release the milk hose from the milk foamer [2]
- ✻ Release the milk hose from the milk foamer [3]
- ✻ Press the milk foamer with the spout downward onto a solid surface, and separate the top and bottom sections of the milk foamer [4]
- ✻ Remove the hose coupling from the milk hose and from the milk foamer [4]
- ✻ Unscrew the air intake pipe from the milk foamer [5]
- ✻ Unscrew the black cap from the air intake pipe [5]

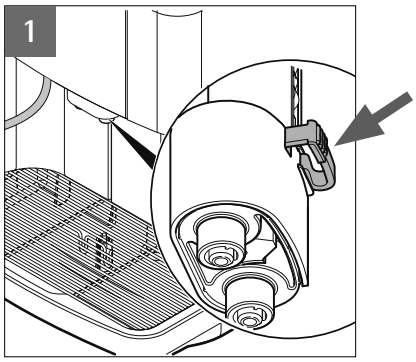

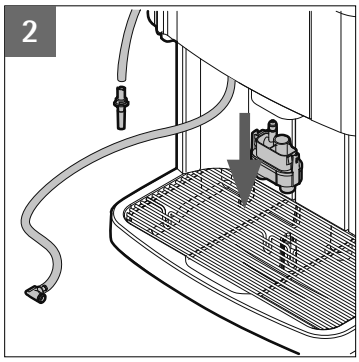

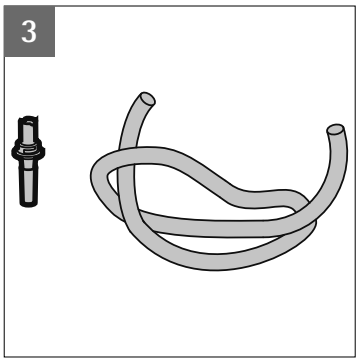

Milk hose and milk nozzle

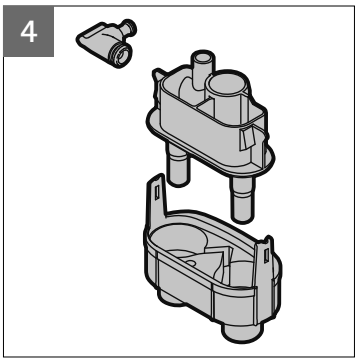

Top and bottom part of the All-in-One spout, with hose coupling

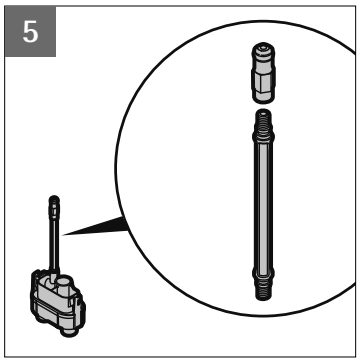

Air intake pipe, with cap

Downloaded from www.Manualslib.com manuals search engine

Health hazard in case of eye contact

- In case of eye contact, the WMF milk system cleaner can cause severe eye injury.

> Ensure that the WMF milk system cleaner never makes contact with the eyes of a person or animal.

⚠ CAUTION

Observe the Safety chapter
▷ starting on page 76

✻ Mix one measured dose of WMF milk system cleaner with 200 ml of water in a container
✻ Place all parts of the milk system in the cleaning solution [3] [4] [5]

All parts must be completely immersed in the cleaning solution. Let stand for 5 hours.

✻ After 5 hours, clean all the parts thoroughly with a brush
✻ Thoroughly rinse all parts with warm drinking water
✻ Dry all parts with a clean dishcloth and allow to dry completely before assembly
✻ Clean any WMF milk system cleaner residue from your hands
✻ Slide the top and bottom parts of the milk foamer together
✻ Screw in the air intake pipe
✻ Slide the hose coupling onto one end of the milk hose, and the milk nozzle onto the other end
✻ Insert the milk foamer in the All-in-One spout from below
✻ Push All-in-One spout downward
✻ Place the milk hose in the guide
✻ Insert the grounds container

Clean the steam nozzle
▷ page 59

Connect up the milk
▷ page 13

Downloaded from www.Manualslib.com manuals search engine

6.16 Clean the brewing unit and brewing chamber

The brewing unit should be cleaned as required and at regular intervals. Recommendation: weekly.

Burn hazard.

- The brewing unit can still be hot immediately after switching off.

> Allow the coffee machine to cool before cleaning.

⚠ CAUTION

Observe the Safety chapter
▷ starting on page 76

✻ Press the ON/OFF button for longer than 3 seconds until the coffee machine switches off
✻ Disconnect mains plug
✻ Open the brewer lid [1]
✻ Unlock brewing unit [2]
✻ Lift the brewing unit up out of the brewer compartment [3]
✻ Use the multitool to turn the thread on the head of the brewing unit counterclockwise [4]

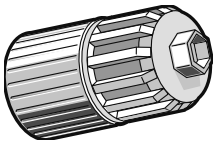

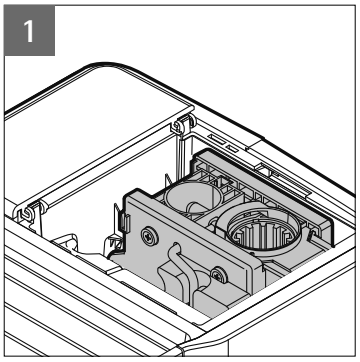

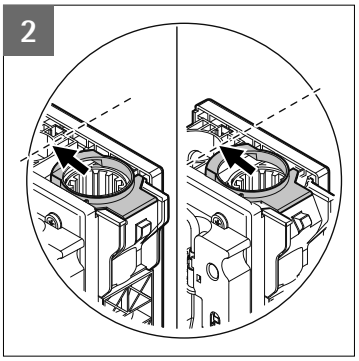

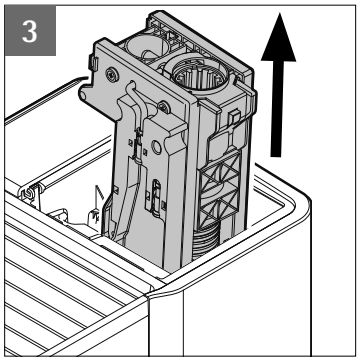

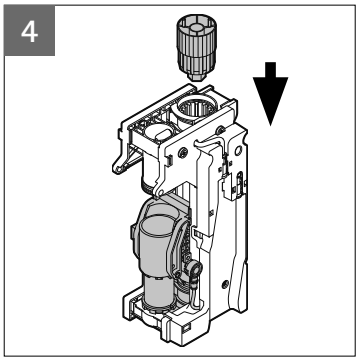

The scraper flips out to the front, and the brewing sieve is now visible [5].

✻ Clean the brewing unit under warm drinking water [6]

Downloaded from www.Manualslib.com manuals search engine

✻ Thoroughly clean the brewing sieve with warm drinking water [7]

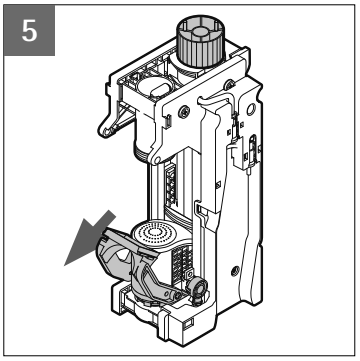

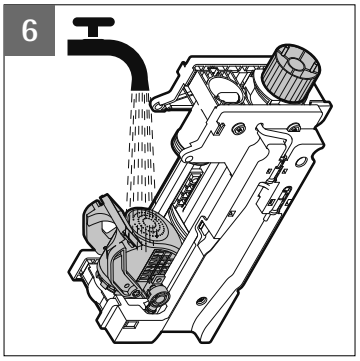

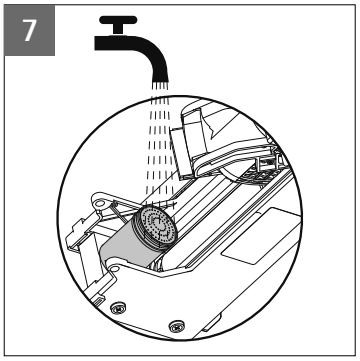

Potential damage

- The brewing unit can be damaged by cleaning agent or in a dishwasher
- > Use only water to clean the brewing unit.
- > Never clean the brewing unit in the dishwasher.

IMPORTANT

Consult the warranty / guarantee section
▷ *from page 83*

✻ Dry off the brewing unit with a cloth and allow to dry completely before installing
✻ Remove the water tank and the grounds container
✻ Remove coffee grounds residue from both openings, using a vacuum cleaner, for example
✻ Use the multitool to turn the thread at the top of the brewing unit clockwise, until the black scraper folds back in [3]
✻ Insert the dried brewing unit in until the lock engages
✻ Close the brewer lid

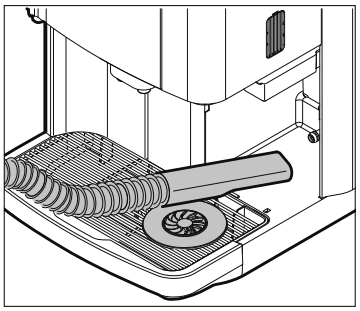

- The brewing unit can slip downwards.
- > Always hold the brewing unit securely.
- > Never use force. Danger of breakage.

If the brewing unit cannot be inserted without resistance:

- > Turn the thread on the brewing unit head slightly to the left or right with the multitool until the brewing unit slides into the guide.
- > Never use force. Danger of breakage.

IMPORTANT

Consult the warranty / guarantee section
▷ *from page 83*

Downloaded from www.Manualslib.com manuals search engine

Chapter 7 HACCP cleaning schedule

You are required by law to ensure that your customers are not subject to any health hazards as a consequence of the consumption of the food items you serve.
A HACCP cleaning schedule (Hazard Analysis Critical Control Points) for risk identification and assessment is required. You should carry out a risk analysis on your premises. The aim of the analysis is to recognize and pre-empt food hygiene hazard points. For this purpose, monitoring and, where necessary, test procedures must be established and implemented.
With correct installation, care, maintenance, and cleaning, WMF coffee machines meet the requirements described above. If care and cleaning of the coffee machine is not carried out properly, dispensing milk beverages will constitute a food hygiene hazard point. Please observe the following points in order to comply with the HACCP cleaning schedule:

"Food Hygiene Ordinance from 05.08.1997"

Use our HACCP cleaning schedule for monitoring of regular cleaning.

Sanitize the milk system daily

- Follow the cleaning instructions for the milk system contained in the User Manual. This will ensure that your system contains a minimum of bacteria at commencement of operation.

Always commence operation with a freshly opened cooled milk pack

- Original packaged UHT milk is usually free from harmful bacteria. Always open a new cooled milk pack at commencement of operation.
- Ensure absolute cleanliness when opening the milk pack. Germs can be introduced from dirty hands or tools when opening.

Recommendation:

only use UHT milk with a 1.5 % fat content.

Valid for commercial use

Downloaded from www.Manualslib.com manuals search engine

Valid for commercial use

Keep milk cool.

- Always have a new cooled milk pack handy.
- If cooling is not used during operation, then the milk must be used up very quickly. Cool the milk occasionally if needed.
- If little milk is used, cooled milk must be placed in the refrigerator again during operation.

At commencement of operation milk should be at approx. 6–8 °C.

HACCP cleaning schedule

Month _____ Year _____

Only use cooled UHT milk, to prevent health risks due to bacteria.

Cleaning steps:

1. Run the cleaning program
   ▷Cleaning instructions
2. Manual All-in-One spout cleaning (Milk foamer)
   ▷Cleaning instructions
3. Clean the milk system and change out the All-in-One spout after 4 hours of operation time (absolutely required for a low number of dispense cycles, or if milk is not cooled)
4. General machine cleaning

Date	Cleaning steps				Signature
	Time				
	1	2	3	4	
1.					
2.					
3.					
4.					
5.					
6.					
7.					
8.					
9.					
10.					
11.					
12.					
13.					
14.					
15.					
16.					

Date	Cleaning steps				Signature
	Time				
	1	2	3	4	
17.					
18.					
19.					
20.					
21.					
22.					
23.					
24.					
25.					
26.					
27.					
28.					
29.					
30.					
31.					

Downloaded from www.Manualslib.com manuals search engine

Chapter 8 Messages and instructions

8.1 Operating messages

8.1.1 Empty grounds container

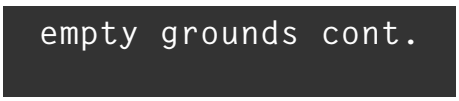

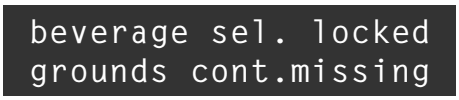

Grounds container is full

- ✻ Remove the grounds container, empty it, and rinse under running water
- ✻ Wipe the grounds container dry
- ✻ Replace grounds container
- ✻ Press P to confirm the message

8.1.2 Fill the water tank

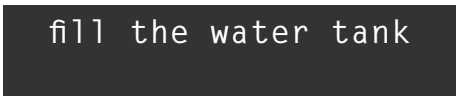

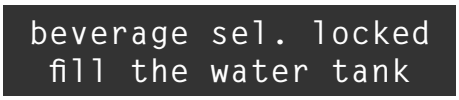

The water tank is nearly empty

- ✻ Rinse out the water tank and fill it with clean cold drinking water
- ✻ Insert the water tank

8.1.3 Drip tray missing

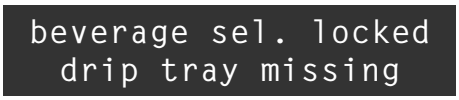

The drip tray is not in place

- ✻ Reinsert the drip tray

8.1.4 Bean hopper is empty

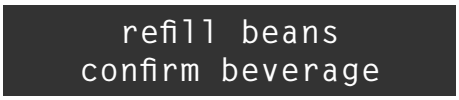

Error messages on the display
▷ page 71

There are not enough coffee beans in the bean hopper

Grinding is interrupted.

- ✻ Pour coffee beans into the bean hopper
- ✻ Touch the desired beverage button again

The grinding process continues and the additional coffee required for the brewing cycle is ground. The desired beverage is brewed.

Downloaded from www.Manualslib.com manuals search engine

beverage sel. locked
bean container empty

There are enough coffee beans in the bean hopper

✻ Switch off the coffee machine
✻ Disconnect mains plug
✻ Use a large spoon to stir the coffee beans in the bean hopper
✻ Switch on the coffee machine

If the error messages appears again after a few coffees have been dispensed, the coffee beans are too large.

✻ Change the type of coffee (remove all beans of the old variety from the bean hopper)

8.1.5 Insert ground coffee

insert ground coffee
select beverage

The manual insert lid is open

✻ Insert ground coffee
✻ Close the manual insert lid
✻ Select the desired beverage with the beverage button

Touch C *to cancel the process. Ground coffee that has already been inserted is removed via the grounds container.*

8.1.6 Clean the machine

machine cleaning
OK: P

The machine must be cleaned

✻ Perform a machine cleaning

▷ *Care* ▷ *Machine cleaning, page 52*

8.1.7 Change filter

your selection pls
change water filter

The water filter must be changed

✻ Change the filter

Change water filter ▷ *page 54*

8.1.8 Descale machine

machine descaling
OK: P

The machine must be descaled

✻ Perform a descaling

▷ *Care* ▷ *Descaling, page 55*

Downloaded from www.Manualslib.com manuals search engine

8.2 Error messages and malfunctions

Basic procedure for error messages or malfunctions
Switch off the coffee machine and then on again after a few seconds. Repeat the process which led to the error. In many cases, this eliminates the error and you can continue working.
If this is not successful:
Find the displayed error message or error number in the following error list and follow the action instructions.
If the error occurs again or if the error indicated is not listed please call the WMF Service.
Some messages lead to blocking of individual functions. You will notice this by the fact that the beverage button illumination goes out. The beverage buttons that are still illuminated can continue to be used.

WMF Service
▷ *page 85*

8.2.1 Error messages on the display

Error message	*Action instructions*
Insert the brewing unit	The brewing unit is not inserted ✻ Insert the brewing unit
Brewer end switch	Brewing unit is not inserted properly ✻ Insert the brewing unit properly
	Brewing unit stiff ✻ Remove the brewing unit, open the brewing chamber with the multitool, and lightly grease the red sealing ring with WMF “gasket grease” ▷ *Instructions in the care kit*
Flow error (with empty water tank)	✻ Fill the water tank with clean cold drinking water ✻ Switch the coffee machine off and then back on after a few seconds ▷ *Care* ▷ *Water tank, page 61* ✻ Deaerate the coffee machine: dispense hot water until a smooth water stream comes out

Downloaded from www.Manualslib.com manuals search engine

Error message	*Action instructions*
Flow error (with filled water tank)	**Air in the system**, possibly accompanied by loud pump noises ✻ Check that the grounds container is completely inserted ✻ Deaerate the coffee machine: dispense hot water until a smooth water stream comes out **No hot water dispensing** ✻ If fitted, remove the water filter / dirt trap from the tank and try again ✻ Check the O-ring on the water tank coupling and replace if needed ✻ If the error recurs, call the WMF Service **Brewing unit is clogged** ✻ Remove the brewing unit, clean it manually, insert it, and perform a machine cleaning ✻ Clean the brewing unit ▷ *Care* ▷ *Brewing unit, page 65* **The error occurs sporadically** ✻ Set grinding degree one stage coarser ▷ *Settings* ▷ *Set grinding degree, page 45*
EEPROM Error	✻ Switch off the coffee machine and then on again after a few seconds ✻ If the error recurs, call the WMF Service
Grinding degree too fine? Is the brewing unit clogged?	Look for the cause: **The dispensing stream is interrupted; the ground coffee has clogged the brewing sieve** **Clean the brewing unit when the message appears** ▷ *Care* ▷ *Clean the brewing unit, page 65* **With filled water tank:** ✻ Clean the water tank ✻ Fill the water tank with clean cold drinking water and reinsert it **If the message appears again, with a full water tank** ✻ Set grinding degree one stage coarser

Downloaded from www.Manualslib.com manuals search engine

Error message	*Action instructions*
Motor driver error	✻ Switch off the coffee machine and then on again after a few seconds ✻ If the error recurs, call the WMF Service
Grinder blocked	**The grinder is blocked by a foreign object** ▷ *Release blocked grinder, page 62*
	Grinding degree too fine ✻ Set the grinding degree to be more coarse ▷ *Settings* ▷ *Set grinding degree, page 45*
Level timeout	**Air in the system**, possibly accompanied by loud pump noises ✻ Check that the grounds container is completely inserted ✻ Remove the milk hose from the milk container and touch the milk button **If steam comes out instead of hot water** ✻ Perform a descaling **If steam comes out** ✻ Call the WMF Service
Key-Time-Out	The control control panel is dirty and needs to be cleaned.
Steam temperature sensor Water temperature sensor	✻ Switch off the coffee machine, allow to cool and switch on again ✻ If the error recurs, call the WMF Service

Downloaded from www.Manualslib.com manuals search engine

8.2.2 Errors without error messages

Error pattern	*Action instructions*
No milk foam dispensing No milk output, but milk in the milk container	✻ Check whether the milk hose is kinked or squashed ✻ Route the milk hose again ✻ Clean the All-in-One spout, milk nozzle and milk hose ▷ *Care* ▷ *Milk system cleaning, page 62* ✻ Clean the steam nozzle ▷ *Care* ▷ *Clean the steam nozzle, page 59*
No milk foam, only warm milk	✻ Perform Milk system rinsing If the problem continues: ✻ Clean air intake pipe and air intake nozzle
Milk or milk foam too cold	✻ Make sure that the milk nozzle is attached to the milk hose ✻ Check whether the correct milk nozzle is attached (brown for chilled milk)
Milk is too warm and too little in quantity Milk foam has bubbles	**Milk is too warm** ✻ Cool milk ✻ Check whether the milk hose is kinked or squashed ✻ Route the milk hose again ✻ Check whether the correct milk nozzle is attached (transparent for milk that is not refrigerated) **Leaking** ✻ Check all the connections and seals on the All-in-One spout
Pump causes loud noises	Water tank is not inserted properly (air in system) ✻ Insert the water tank completely ✻ Deaerate the coffee machine: dispense hot water until a smooth water stream comes out *Note: it is normal for the water pump to start by itself from time to time during operation, as it automatically fills the system.*

Downloaded from www.Manualslib.com manuals search engine

Error pattern	*Action instructions*
Coffee has no crema	• Coffee mixture is not suitable, or coffee is no longer fresh • Quantity of ground coffee is set too low • Cup is too cold: preheat • Brewing temperature is too low: increase temperature *Brewing temperature ▷ Settings ▷ Basic settings, page 40* • Grinding degree too coarse: set the grinding degree to be finer *▷ Settings ▷ Set grinding degree, page 45* ✻ Perform a warm-up rinsing
Coffee does not taste good	✻ Run two brewing cycles after a long idle period *This removes any remaining beans from the grinder and replaces them with those that have just been added.* ✻ Perform a machine cleaning *Machine cleaning ▷ Care, page 52*
Noticeably large amount of coarse ground coffee in the brewing chamber	✻ Check the grinding degree setting and set finer if needed
Water tank is difficult to move	✻ Lightly smear the O-rings on the water tank coupling with the WMF "gasket grease" *▷ Instructions in the care kit*
Brewing unit is difficult to remove and reinsert	✻ Lightly smear the O-rings on the brewing unit with WMF "gasket grease" *▷ Instructions in the care kit*
Lid open	✻ The lid is not closed properly. Please check.
Brewing unit cannot be removed or replaced	The brewing unit is not in the normal position ✻ Close the cover and switch on the coffee machine ✻ Adjust the brewing unit with the multitool while inserting it, until the brewing unit can be inserted

Downloaded from www.Manualslib.com manuals search engine

Chapter 9 Safety

Hazard if used incorrectly.
Failure to follow the safety instructions can result in death or serious injury.
- Follow all the safety instructions.

⚠ WARNING

9.1 Hazards to the operator

At WMF, safety is one of the most essential product features. The effectiveness of the safety devices can only be ensured if the following points are observed.

⚠ CAUTION

- Read the User Manual carefully prior to use.
- Do not touch hot machine components.
- Do not use the coffee machine if it is not working properly or if it is damaged.
- Use the coffee machine only when it is completely assembled.
- Built-in safety devices must never be altered.
- This device can be used by children of age 8 or greater while under continuous supervision, as well as by persons with reduced physical, sensory, or mental capabilities or lack of experience or knowledge, once they have been instructed in the safe use of the machine and the risks associated with it.
- Children may not play with the device.
- Cleaning and user maintenance must not be performed by children.

Downloaded from www.Manualslib.com manuals search engine

Despite the safety devices, every coffee machine poses hazard potential if incorrectly used. Please observe the following instructions when using the coffee machine so as to prevent injury and health hazards.

⚠ WARNING



Hazard to life due to electrical shock if not followed



The voltage inside the coffee machine is a hazard to life.

> Never open the housing.
> Never loosen the screws, and do not remove any housing parts.
> Never use a damaged power cord.
> Avoid damage to the power cord. Do not kink or crush it.

⚠ CAUTION



Burn hazard. Scalding hazard.

- When dispensing beverages and steam, hot liquid comes out of the spouts. The adjacent surfaces and spouts also become hot.



> When dispensing beverages and steam, do not reach beneath the spouts.
> Do not touch the spouts immediately after dispensing.
> Always place a suitable cup under the spout when dispensing beverages.
> Never use the SteamJet function without the drip tray grid or the cup warmer cover in place.

⚠ CAUTION



Burn hazard. Hot surfaces.

- The brewing unit can get hot.



> Clean the brewing unit only when the machine has cooled off.

Downloaded from www.Manualslib.com manuals search engine



Bruising or crushing hazard. Risk of injury.

- The coffee machine contains moving parts that can cause finger or hand injury.

> Always switch off the coffee machine and unplug the mains plug before reaching into the coffee grinder or the opening of the brewing unit.

⚠ CAUTION



Health hazard.

- Only use products that are suitable for consumption and for use with the coffee machine.

> The bean hopper and manual insert may only be filled with materials for the use intended.

⚠ CAUTION



Health hazard.

- The milk system cleaner, cleaning tablets, and liquid descaling agent are irritating.

> Follow the protective measures on the packaging of the cleaning agent.

> Only put in cleaning tablet or liquid descaling agent after the display message.

⚠ CAUTION



Health hazard.
Irritation and scalding hazard.

- During cleaning and descaling, hot cleaning solution or descaling solution flows out of the All-in-One spout.
- The hot liquids can irritate the skin, and the heat poses a burn hazard.

> Never reach under the spouts while cleaning or descaling.

> Ensure that no one ever drinks the cleaning solution or descaling solution.

⚠ CAUTION

Downloaded from www.Manualslib.com manuals search engine



Slipping hazard.

- Fluids can be discharged from the coffee machine if used improperly or if errors occur. These fluids can cause a slipping hazard.

> Regularly check whether the coffee machine is leaking, and make sure no water is coming out.

⚠ CAUTION

Observe the Safety chapter
▷ starting on page 76

9.2 Hazards to the coffee machine



Follow the manual.

If this is not observed, the warranty is invalidated in the event of any resultant damage.

Observe the conditions for usage and installation.

Installation location

- The installation location must be dry and protected against water spray.
- Some condensate, water, or steam can always be discharged from a coffee machine.

> Do not use the coffee machine outdoors.

> Set up the coffee machine so that it is protected against water spray.

> Always place the coffee machine on a water-resistant and heatproof base in order to protect the installation surface against damage.

Coffee grinder

- Foreign objects can damage the grinders. This damage is not covered under the warranty.

> Ensure that no foreign objects land in the coffee bean hopper.

IMPORTANT

Consult the warranty / guarantee section
▷ from page 83

Conditions for usage and installation
▷ starting on page 86

Downloaded from www.Manualslib.com manuals search engine

Please observe the following instructions so as to prevent problems with and damage to the coffee machine:

- For water with carbonate hardness in excess of 5 °dKH, a WMF water filter must be fitted; otherwise, the coffee machine can be damaged due to build-up of scale.
- For insurance reasons always ensure that, at the end of operation, the mains switch is switched off or the mains plug is unplugged.
- We recommend damage prevention measures, such as:
  - installation of a suitable water monitor in the mains water supply
  - installation of smoke alarms
- After shut off for longer than 2 weeks we recommend running the cleaning program at least twice before reusing the machine.

Care ▷ page 55

Downloaded from www.Manualslib.com manuals search engine

Chapter 10 Intended use and Directives

10.1 Intended use

The WMF 900 is designed to dispense coffee beverages and milk beverages in various variations into cups or pots. In addition, the coffee machine can dispense hot water. This device is also intended for industrial and commercial use and for use by professionals and trained users in shops in the consumer goods industry and agricultural holdings, or for the commercial use by non-professionals. The device can be used as a self-service device if it is supervised by trained personnel.

The use of the device is also subject to the "General Terms and Conditions" of WMF AG and this User Manual. Any other use or use that goes beyond the aforementioned is considered incorrect use. The manufacturer shall not be liable for any damage resulting from this.
Under no circumstances may the WMF 900 be used to dispense and heat liquids other than coffee, hot water (beverages, cleaning) or milk (cooled, pasteurised, homogenised, UHT).

10.2 Duties of the owner / operator

The operator of such equipment must ensure regular maintenance by WMF Service technicians, their agents or other authorised persons, and checking of safety devices.
Access to the service area is permitted only for persons with knowledge and practical experience with the device, especially regarding safety and hygiene.
The coffee machine must be set up by the operator such that care and maintenance can be performed without hindrance.

In office / floor supply or similar self-service applications, only staff instructed in operation of the coffee machine should supervise the coffee machine. Trained personnel should carry out care procedures and be available for questions regarding use.
The operator shall ensure that electrical equipment and operating facilities are in a fit state (e.g. to BGV A3) [German Accident Prevention Association or equivalent].

Downloaded from www.Manualslib.com manuals search engine

In order to ensure the operating safety of your coffee machine, it is essential to perform regular checks of the safety valves and the pressure containers, among other checks. These measures are conducted by WMF Service or by WMF authorised service personnel as part of the maintenance work.
Machine cleaning must be carried out using only the WMF special cleaning agent intended by WMF for the coffee machine (tablets), and for the milk system (cleaning liquid).
Machine may only be descaled using the special WMF descaling agent.

The manufacturer's specifications regarding maintenance cycles and frequency of maintenance (▷Maintenance) must be observed.

10.3 Directives

The device fulfils the requirements of the German Food and Feed Code (LFGB), the Regulation on Commodities (BedGgstV), the EU regulation No. 10/2011 as well as the EU regulation No. 1935/2004 in the currently valid editions.
When used properly, the device does not present a health hazard or other unreasonable hazard.
The materials and raw materials used fulfil the requirements of the Regulation on Commodities as well as the EC regulations No. 10/2011.
The device fulfils the requirements of all applicable regulations in the directives MD (MR) 2006/42/EC (EG), Directive 2004/108/EC (EMC), Directive 2011/65/EC (ROHS), Directive 2002/96/EC (WEEE).

The declaration of conformity is included with the device. The device bears the CE mark.
Any modifications that are not approved by WMF will cause this declaration to become invalid.
Currently valid national rules apply in countries outside of the European Union.
This device is subject to the directive on waste electrical and electronic equipment (WEEE / EU directive) and may not be disposed of as domestic waste.



Disposal
▷ page 89

Requirements traceability pursuant to EC regulation No. 1935/2004 and Good Manufacturing Practice within the meaning of EC regulation No. 2023/2006 are ensured and guaranteed.

Downloaded from www.Manualslib.com manuals search engine

Chapter 11Warranty for commercial use

11.1 Warranty for commercial use

During the warranty period of 12 months from transfer of risk, the purchaser has statutory warranty entitlements.
The vendor should always be afforded the opportunity to rectify errors within an appropriate period.

Claims that exceed the above terms, in particular damage claims as a result of consequential damage, are excluded to the extent that this is legally permissible.
Material defects shall be reported to the vendor immediately and in writing.

11.2 No warranty

The manufacturer does not provide any warranty for the cases listed below.

- On any parts subject to natural wear and tear. This includes seals and the like.
- For malfunctions due to the effect of the weather, scale build-up, chemical, physical, electrochemical or electrical effects, unless attributable to a fault on the part of WMF.
- With respect to faults which occur as a result of failure to follow handling instructions and regulations, maintenance and care of the device in accordance with the User Manual.
- With respect to faults which occur as the result of failure to use original WMF spare parts or incorrect assembly by the purchaser or by third parties or by faulty or negligent treatment.
- With respect to the consequences of improper modifications undertaken without the consent of WMF, or by repair or reconditioning work on the part of the purchaser or by third parties.
- For defects that can be attributed to inappropriate or improper use.

Downloaded from www.Manualslib.com manuals search engine

Chapter 12 Guarantee and directives for private use

12.1 Intended use

The WMF 900 is designed to dispense coffee beverages and milk beverages in various variations into cups or pots. In addition, the coffee machine can dispense hot water.
The use of the device is also subject to the "General Terms and Conditions" of WMF AG and this User Manual. Any other use or use that goes beyond the aforementioned is considered incorrect use. The manufacturer shall not be liable for any damage resulting from this.
Under no circumstances may the WMF 900 be used to dispense and heat liquids other than coffee, hot water (beverages, cleaning) or milk (cooled, pasteurised, homogenised, UHT).

12.2 Directives

The device meets the requirements of all applicable regulations of the low-voltage directive 2006/95/EC, Directive 2004/108/EC (EMC), Directive 2011/65/EC (ROHS), Directive 2009/125/EC (ErP), Directive 2002/96/EC (WEEE). This device is subject to the directive on waste electrical and electronic equipment (WEEE / EU directive) and may not be disposed of as domestic waste.



Disposal
▷ page 89

Requirements traceability pursuant to EC regulation No. 1935/2004 and Good Manufacturing Practice within the meaning of EC regulation No. 2023/2006 are ensured and guaranteed.

12.3 Guarantee and warranty for private use

*During the warranty period, the manufacturer, WMF Württembergische Metallwarenfabrik Aktiengesellschaft, guarantees that the product will function properly. The warranty period is two years, and a maximum of 7,000 brewing cycles may be performed during this period. * For new products in the original packaging with a store receipt (not for used machines.)*
The warranty period starts on the day of purchase.
If product defects should arise during the warranty period, WMF will repair the coffee machine at no cost, or replace defective parts. Warranty coverage is limited exclusively to this claim. No other claims arising from the warranty will be honoured. The retail receipt must be presented for any warranty claim. The warranty applies only in Germany and Austria, and only upon the presentation of proof of purchase. Of course, the purchaser's legal rights under guarantee / warranty are not affected by this declaration of guarantee. In Germany, within the warranty time period, you have the legal

Downloaded from www.Manualslib.com manuals search engine

right to replacement, cancellation, and restitution of damages by the vendor according to §§ 437 ff BGB to the extent provided by law.
The guarantee is fully valid only if repairs are made at the WMF Service Center. Any claim of warranty is void if repairs are made outside of a WMF Service Center.

Machine cleaning must be carried out using only the WMF special cleaning agent intended by WMF for the coffee machine (tablets), and for the milk system (cleaning liquid).
Machine may only be descaled using the special WMF descaling agent.

Chapter 13 Premium service and maintenance 24 months

Do you have questions about the use or functionality of your WMF 900?
Just call our WMF Service hotline. Or write us an email. Besides your specialist dealer, the WMF Service Center is your first point of contact.

Our trained technicians can often provide assistance over the phone, or they will arrange for the next steps for making repairs.
You can reach the WMF Service Center if the local WMF Service is not known.

Service certificate:
▷ *www.wmf.de* ▷ *Coffee & Tea* ▷ *Fully automatic coffee machines* ▷ *WMF 900* ▷ *Downloads*

Name and address of the guarantor

In Germany:

WMF Württembergische Metallwarenfabrik Aktiengesellschaft
Eberhardstraße
73309 Geislingen / Steige

Downloaded from www.Manualslib.com manuals search engine

Chapter 14 Technical data

Machine model	03 0400
Nominal power rating *	1.7–2.3 kW
Mains power connection *	1/N/PE ~ 50/60 Hz; 220–240 V
Power cord length	0,8 m
Recommended daily capacity espresso, café crème	35 cups
Variable brewing chamber	6 to 15 g
Water tank capacity (without filter)	2,2 liters
Grounds container	Approx. 15–20 portions
Height-adjustable All-in-One spout	67 to 141 mm
High-performance pump	15 bar
Illumination	LED class 1
Independent heating systems	2
External dimensions *At least 250 mm clearance must be provided above the machine in order to remove the brewing unit for maintenance and cleaning.*	Width 305 mm Height incl. bean hopper 400 mm Depth 443 mm
Weight empty	approx. 15 kg
Brewing unit weight	1,2 kg
Continuous sound pressure level (Lpa) **	< 70 dB(A)

We reserve the right to make technical modifications.

* *For special models see model label, values given above are for the basic model.*

** *A-evaluated sound pressure level Lpa (slow) and Lpa (impulses) at operating personnel workplace is under 70 dB(A) in any working mode.*

Conditions for usage and installation

Necessary on-site preparatory work for electricity, water and drainage connections at the customer's premises are to be arranged by the machine owner / operator. The work must be carried out by authorised installation technicians in compliance with general, country-specific and local regulations. The potential equalization terminal is installed by WMF Service if needed.

Downloaded from www.Manualslib.com manuals search engine

Mains voltage tolerance range	1/N/PE ~ 50/60 Hz, 220–240 V Mains voltage interruption < 50 ms no interruption of function
Customers on-site circuit protection	Maximum 16 A
Water	Water temperature maximum 35 °C.
Water quality	For drinking water with carbonate hardness above 5 °dKH, a WMF water filter should be fitted upstream.
Ambient temperature	+5 °C to maximum +35 °C (empty the water system in case of frost).
Maximum humidity	80 % relative humidity without condensation. Do not use device outdoors.
Degree of protection	IP X0
Installation surface	The device must be placed on a level, flat, and sturdy surface. The device must not be cleaned using a water jet. The device must be installed where it is protected against water spray. The machine must not located on a surface that is sprayed or cleaned with a water hose, steam jets, steam cleaner, or similar devices. Protect the installation surface with a waterproof and heatproof underlayment.
Installation clearances	For operating, service and safety reasons the machine should be installed with a clearance of not less than 50 mm at the back and sides from the building or non-WMF components. A minimum working space of 800 mm in front of the coffee machine is recommended. A clear height of 1,100 * mm from the top of the installation surface should be ensured. The height of the installation surface above the floor is at least 850 mm. If the coffee machine connections are to be run downwards through the counter, please make space for the lines, which can reduce the usable space below the machine.

* *Value applies for commercial use.*

Downloaded from www.Manualslib.com manuals search engine

These specifications for the electrical connection and the standards quoted apply for connecting the coffee machine in EU countries. It may be necessary to also observe additional country-specific regulations. Outside the EU countries, acceptance of the standards quoted is to be checked by the legal entity or natural person who wishes to use the coffee machine.

Customer's on-site electrical system

The local power supply must be constructed according to IEC 364 (DIN VDE 0100). To improve safety, the device should be fitted with an FI 30 mA earth leakage current circuit breaker complying with EN 61008. (Type B residual current circuit breakers provide reliable tripping even if the fault current is smooth. This ensures a high level of safety.) Near the device or about 30 cm below the counter top there should be a shockproof socket as a single-phase connection installed locally on the rear or side wall of the counter substructure or a country-specific single-phase socket.

If the mains cable for this device is damaged then it must be replaced by our service personnel or a similarly qualified person, in order to prevent hazards. A separator switch is recommended for a flexible connection. The mains cable must not come into contact with hot surfaces. The mains switch and plug top are part of the on-site installation.

The coffee machine may not be fitted with a fixed permanent mains connection if installed on a transporting trolley (a mobile station).

Downloaded from www.Manualslib.com manuals search engine

Chapter 15 Shipping and disposal

- Retain the original packaging for safe shipping.
- Empty the water tank, drip tray, coffee grounds container, and bean hopper before shipping.
- Ship or transport the machine only in the original box.



Disposal options for the disused device can be found at your local community or city management offices. This device conforms to the European Directive 2002/96/EC on waste electrical and electronic equipment (WEEE) and must not be disposed of in household trash. Further information is available at your nearest collection station or at your service center.

Downloaded from www.Manualslib.com manuals search engine

Index

A

Activate the PIN function 41
All-in-One spout 7, 23
Audio signal 40
Automatic switch-on time 38

B

Basic settings 37
Bean hopper 7, 25, 86
Beverage button 7, 20
Beverage buttons 21
Beverage dispensing 20
Brewing temperature 40
Brewing unit 7, 65

C

Café crème button 21
Cancel beverage dispensing 20
Cappuccino button 21
Care 46
Care safety instructions 46
Change PIN 42
Change recipes 31
Change water filter 54
Cleaning intervals 48
Cleaning schedule 67
Clean the All-in-One spout 50
Clean the brewing unit 65
Clean the milk system 49, 62
Clean the water tank 61
Clearance height 23
Coffee bean hopper 14
Coffee strength 32
Coffee strength for the next beverage 24
Complete start-up 18
Conditions for usage and installation 86
Connect & Clean 49
Connect up the milk 13
Continuous sound pressure level 86
Cool milk 68
C pad 7, 15
Cup size 30
Cup volume 30
Cup volume for the next beverage 24
Cup warmer 7, 23

D

Date 16, 37, 38
Date of production 44
Date / time 38
Delete counters 43
Descaling 55
Determine the water hardness 12
Device name 44
Directives 82, 84
Dispensing hot water 7, 22
Dispensing test 30, 31
Display 7
Display contrast 42
Drip grid 7
Drip tray 7, 11, 26
Duties of the owner / operator 81

E

ECO-mode 39
Electrical connection 88
Error list 71
Error message 71
Error messages on the display 71
Errors without error message 74
Espresso button 21
External dimensions 86

F

Factory settings 41
Fill the bean hopper 14
Functional pads 15

G

Glossary 9
Grounds container 7, 26
Guarantee/warranty 83
Guarantor 85

H

HACCP cleaning schedule 67
Hazards to the coffee machine 79
Hazards to the operator 76
Height adjustment of the All-in-One spout 23
Hot water button 7, 21, 22
Hot water output 86
Hot water spout 7

I

Illumination 86
Insert water filter 12
Installation location 11
Intended use 81
Introduction 6

K

Keep counter settings 43

L

Language 37
Latte macchiato button 21
Level indicator 26

Downloaded from www.Manualslib.com manuals search engine

M

Machine cleaning 52
Machine number 44
Mains power connection 86
Malfunctions 71
Manual insert 7, 25
Messages and instructions 69
Messages for operation 69
Milk button 21
Milk foam 22
Milk foam volume 32
Milk hose 7
Milk system cleaning 50
Milk system rinsing 49, 50
Minus pad 7, 15

N

Nominal power rating 86
Notes 69

O

ON/OFF button 7
Operating messages 69
Operation 19
Operation safety instructions 19
Other settings 45

P

Parts of the coffee machine 6
Plus pad 7, 15
Potential equalization terminal 86
Pot function 24
Power connection 15
P pad 7
Preinfusion 33
Product hopper 25
Profile 34

R

Read counters 43
Ready to operate 9, 19
Recommended daily capacity 86
Release blocked grinder 62
Rest time 32
Rinse water filter 17

S

Safety 76
Safety devices 76
Sanitize milk system 67
Sequence of milk and coffee dispensing 33
Set grinding degree 45
Settings (Software) 28
Software version 44
Star pad 7, 15
Start care programs 49
Start-up 10
Start-up program 16
Start-up safety instructions 10
Steam nozzle 59
Switch off 7, 27
Switch-off time 37, 38
Switch on 19
Switch on the coffee machine 16, 19
Switch-on time 37
System information 44

T

Technical data 86
Time 16, 37, 38
Touch-screen display 7

U

Unpacking 11
User Manual Signs and Symbols 8
User Manual Symbols 8
User profiles 34

W

Warm milk 22
Warm rinsing 41
Warm-up rinsing 41
Warranty for commercial use 83
Water hardness 40
Water tank 7
Water volume 32
Weight empty 86
Without water drain 26
WMF Service Hotline 85
Work on site 86

Downloaded from www.Manualslib.com manuals search engine



900

Your nearest WMF Service:

© 2012–2014 WMF AG
All rights reserved, in particular duplication, distribution and translation rights.
No part of this manual may be reproduced in any form or processed, duplicated or distributed using electronic systems without written consent.

Design and production / typesetting and print presentation:
TecDoc GmbH; Geislingen, info@tecdocgmbh.de

Original User Manual. Printed in Germany.

We reserve the right to make technical modifications.

16.05.2014

Downloaded from www.Manualslib.com manuals search engine