XEFT-03HS-EGDN/0.D01 3 460X330 GO CONTROL STEFANIA OVEN

Assembly code	Assembly revision	Assembly image
ASM3419A/0.D00	Door	
ASM3438A/0.D01	Electrical system	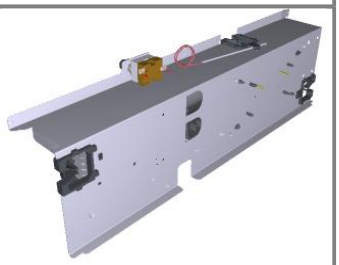
ASM3401A/0.D01	Cooking chamber	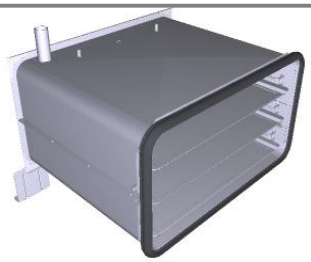
ASM3407A/0.D01	External cover	

ASM3419A/0.D00 - Door

FRONT



ASM3419A/0.D00 - Door

REAR

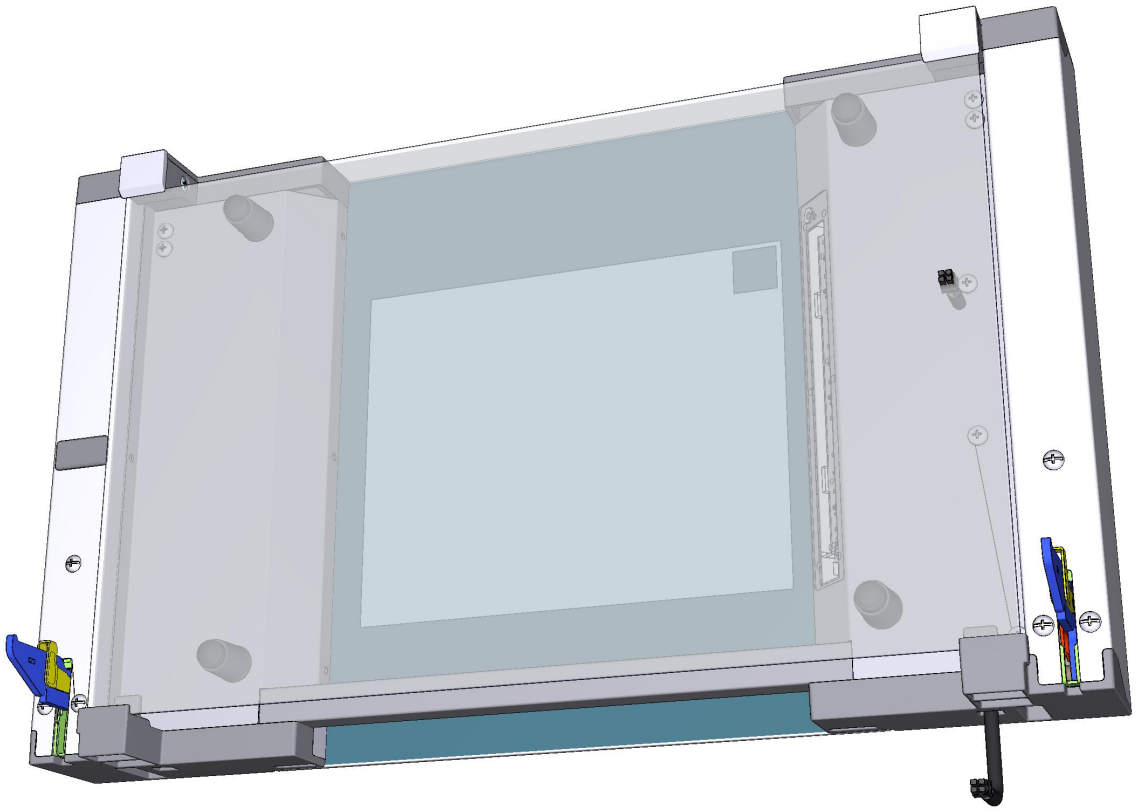

COMPONENT			SPARE PART		
Code	*Description*	*Image*	*Code*	*Description*	*Components list*
CE1285A	EMI ROUND FERRITE MOD.2643801502	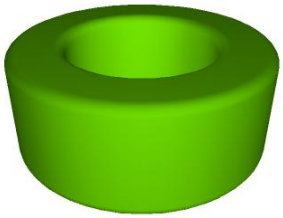	CE1285A0	EMI ROUND FERRITE MOD.2643801502	
LP1050A	BL SHOP.PRO L180 COMPLETE LED BA		KLP1050A	BAKERLUX SHOP.PRO L180 LED BAR KIT	Code / Description / Qty / UOM IP1385A1 / CORNER POLYSTYRENE PACKING 110X80X2000 / 0.300 / M LP1050A0 / BL SHOP.PRO L180 COMPLETE LED BAR / 1 / PZ VI1014A0 / STAINLESS STEEL WASHER 4.5X9X0.8 / 1 / PZ VI1220A1 / 4,2X12 TCB SELF-TAPPING SCREW / 1 / PZ VM1059A1 / HEAT SHRINK FILM H800 / 0.300 / M
VM2471A	BL SP LOWER CLAMP INT LOCK GLASS SLIDER	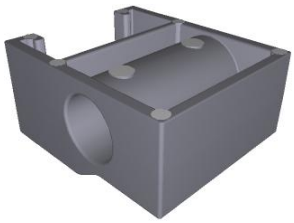	KVM2471A	BL SP INTERNAL GLASS LOCK HOLDER KIT	Code / Description / Qty / UOM VI1930A0 / 5X25 ST. STEEL SCREW CHIP / 2 / PZ VI1998A0 / ZINC PLATED SCREW 5X30 TCB / 2 / PZ VM1224A0 / 65MY 220MM 2 COLOURS SHRINK TUBE / 0.150 / M VM2471A0 / BL SP LOWER CLAMP INT LOCK GLASS SLIDER / 1 / PZ VM2471A0 / BL SP LOWER CLAMP INT LOCK GLASS SLIDER / 1 / PZ VM2472A0 / BL SP UPPER CLAMP INT LOCK GLASS SLIDER / 1 / PZ VM2472A0 / BL SP UPPER CLAMP INT LOCK GLASS SLIDER / 1 / PZ

COMPONENT			SPARE PART		
Code	*Description*	*Image*	*Code*	*Description*	*Components list*
VM2503A	SLIDE TO FIX INTERNAL NON REMOV GLASS SP	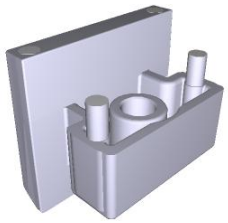	KVM2503A	BL SP INT FIXED GLASS LOCK 2 PCS KIT	Code / Description / Qty / UOM VM1224A0 — 65MY 220MM 2 COLOURS SHRINK TUBE — 0.150 — M VM2503A0 — SLIDE TO FIX INTERNAL NON REMOV GLASS SP — 2 — PZ VM2503A0 — SLIDE TO FIX INTERNAL NON REMOV GLASS SP — 2 — PZ
VM2464A	SHOP.PRO LEFT UPPER CAP DROP DOWN DOOR	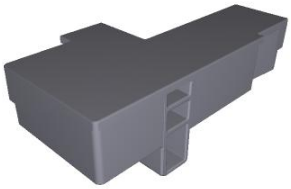	KVM2464A	BL SP LEFT UPPER DROPDOWN DOOR CAP KIT	Code / Description / Qty / UOM VM1224A0 — 65MY 220MM 2 COLOURS SHRINK TUBE — 0.300 — M VM2464A0 — SHOP.PRO LEFT UPPER CAP DROP DOWN DOOR — 1 — PZ VM2464A0 — SHOP.PRO LEFT UPPER CAP DROP DOWN DOOR — 1 — PZ
VM2472A	BL SP UPPER CLAMP INT LOCK GLASS SLIDER	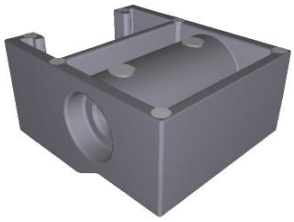	KVM2471A	BL SP INTERNAL GLASS LOCK HOLDER KIT	Code / Description / Qty / UOM VI1930A0 — 5X25 ST. STEEL SCREW CHIP — 2 — PZ VI1998A0 — ZINC PLATED SCREW 5X30 TCB — 2 — PZ VM1224A0 — 65MY 220MM 2 COLOURS SHRINK TUBE — 0.150 — M VM2471A0 — BL SP LOWER CLAMP INT LOCK GLASS SLIDER — 1 — PZ VM2471A0 — BL SP LOWER CLAMP INT LOCK GLASS SLIDER — 1 — PZ VM2472A0 — BL SP UPPER CLAMP INT LOCK GLASS SLIDER — 1 — PZ VM2472A0 — BL SP UPPER CLAMP INT LOCK GLASS SLIDER — 1 — PZ

COMPONENT			SPARE PART		
Code	*Description*	*Image*	*Code*	*Description*	*Components list*
VM2503A	SLIDE TO FIX INTERNAL NON REMOV GLASS SP	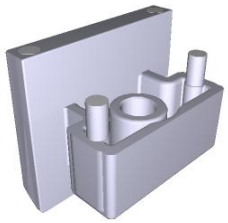	KVM2503A	BL SP INT FIXED GLASS LOCK 2 PCS KIT	Code / Description / Qty / UOM VM1224A0 — 65MY 220MM 2 COLOURS SHRINK TUBE — 0.150 — M VM2503A0 — SLIDE TO FIX INTERNAL NON REMOV GLASS SP — 2 — PZ VM2503A0 — SLIDE TO FIX INTERNAL NON REMOV GLASS SP — 2 — PZ
VM2463A	SHOP.PRO RIGHT UPPER CAP DROP DOWN DOOR		KVM2463A	BL SP RIGHT UPPER DROPDOWN DOOR CAP KIT	Code / Description / Qty / UOM VM1224A0 — 65MY 220MM 2 COLOURS SHRINK TUBE — 0.300 — M VM2463A0 — SHOP.PRO RIGHT UPPER CAP DROP DOWN DOOR — 1 — PZ VM2463A0 — SHOP.PRO RIGHT UPPER CAP DROP DOWN DOOR — 1 — PZ
VM2461A	BL SP RIGHT LOWER DROPDOWN DOOR CAP KIT	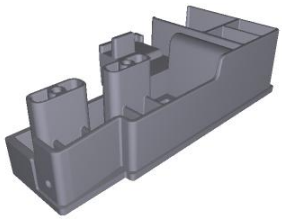	KVM2461A	BL SP RIGHT LOWER DROPDOWN DOOR CAP KIT	Code / Description / Qty / UOM VM1224A0 — 65MY 220MM 2 COLOURS SHRINK TUBE — 0.300 — M VM2461A0 — BL SP RIGHT LOWER DROPDOWN DOOR CAP KIT — 1 — PZ VM2461A0 — BL SP RIGHT LOWER DROPDOWN DOOR CAP KIT — 1 — PZ
VM2462A	BL SP LEFT LOWER DROPDOWN DOOR CAP	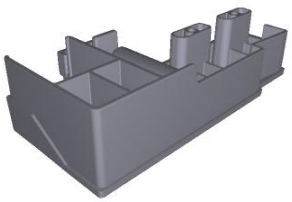	KVM2462A	BL SP LEFT LOWER DROPDOWN DOOR CAP KIT	Code / Description / Qty / UOM VM1224A0 — 65MY 220MM 2 COLOURS SHRINK TUBE — 0.300 — M VM2462A0 — BL SP LEFT LOWER DROPDOWN DOOR CAP — 1 — PZ VM2462A0 — BL SP LEFT LOWER DROPDOWN DOOR CAP — 1 — PZ

COMPONENT			SPARE PART		
Code	*Description*	*Image*	*Code*	*Description*	*Components list*
VM2478A	BL SP GLASS H4 PUSHING BRACKET		KVM2478A	BL SHOP.PRO H4 GLASS SUPPORT 4 PCS KIT	Code / Description / Qty / UOM VM1224A0 — 65MY 220MM 2 COLOURS SHRINK TUBE — 0.200 — M VM1630A0 — INTERNAL GLASS PUSHING CAP — 4 — PZ VM1630A1 — INTERNAL GLASS PUSHING CAP — 4 — PZ VM2478A0 — BL SP GLASS H4 PUSHING BRACKET — 4 — PZ VM2478A0 — BL SP GLASS H4 PUSHING BRACKET — 4 — PZ
VM1630A	INTERNAL GLASS PUSHING CAP		KVM1630A	CAP FOR INTERNAL GLASS 10 PCS KIT	Code / Description / Qty / UOM VM1224A0 — 65MY 220MM 2 COLOURS SHRINK TUBE — 0.200 — M VM1630A0 — INTERNAL GLASS PUSHING CAP — 10 — PZ VM1630A1 — INTERNAL GLASS PUSHING CAP — 10 — PZ
CE1095A	4 POLES MICROFIT 2 M BUS CABLE		KCE1095A	4POLES 2M BUS CABLE KIT POWER-CONTROL	Code / Description / Qty / UOM CE1095A0 — 4 POLES MICROFIT 2 M BUS CABLE — 1 — PZ VM1224A0 — 65MY 220MM 2 COLOURS SHRINK TUBE — 0.250 — M
VM2512A	BL SP DOOR-MICROSWITCH SOFT CLOSING		KVM2512A	BL SP DOOR-MICROSWITCH SOFT CLOSING KI	Code / Description / Qty / UOM VM1224A0 — 65MY 220MM 2 COLOURS SHRINK TUBE — 0.250 — M VM2512A0 — BL SP DOOR-MICRO SWITCH SOFT CLOSING — 1 — PZ VM2512A0 — BL SP DOOR-MICRO SWITCH SOFT CLOSING — 1 — PZ

COMPONENT			SPARE PART		
Code	*Description*	*Image*	*Code*	*Description*	*Components list*
0B1286A			0B1286A0		
0B1288A			0B1288A0		
CR1111A	BLSP STEFANIA DROPDOWN DOOR HINGE		KCR1111A	BAKERLUX SHOP.PRO STEFANIA HINGES KIT	Code / Description / Qty / UOM CR1111A0 / BLSP STEFANIA DROPDOWN DOOR HINGE / 1 / PZ VI1875A0 / SCREW M5X10 TC1/2T INOX / 3 / PZ
VT1323A	SP STEFANIA 357X364X4 EXTERNAL GLASS		KVT1323A	BL SHOP.PRO STEFANIA EXTERNAL GLASS KIT	Code / Description / Qty / UOM 0B0386A0 / SP STE-ELE EXT GLASS SUPPORT PROFILE / 2 / PZ ED1240A0 / TECHNICAL DATA LABEL / 1 / PZ IP1385A1 / CORNER POLYSTYRENE PACKING 110X80X2000 / 0.800 / M IP1508A1 / POLYSTYRENE U SHAPED PROFILE 2000X60X60 / 0.800 / M SL1155A1 / LOCTITE BICOMPONENT SILICON / 14 / ML VI1220A1 / 4,2X12 TCB SELF-TAPPING SCREW / 6 / PZ VM1059A1 / HEAT SHRINK FILM H800 / 1.200 / M

COMPONENT			SPARE PART		
Code	*Description*	*Image*	*Code*	*Description*	*Components list*
VT1323A	SP STEFANIA 357X364X4 EXTERNAL GLASS		KVT1323A	BL SHOP.PRO STEFANIA EXTERNAL GLASS KIT	Code / Description / Qty / UOM VT1323A0 — SP STEFANIA 357X364X4 EXTERNAL GLASS — 1 — PZ VT1323A0 — SP STEFANIA 357X364X4 EXTERNAL GLASS — 1 — PZ
			KDR1285A	BL SHOP.PRO STEFANIA EXTER DOOR KIT LEFT	Code / Description / Qty / UOM 0B1293A0 — SP STE-ELE RIGHT DOOR LEFT EXT COLUMN — 1 — PZ 0B1294A0 — SP STE-ELE RIGHT DOOR LEFT INT COLUMN — 1 — PZ 0B1295B0 — SP STE-ELE RIGHT DOOR RIGHT EXT COLUMN — 1 — PZ 0B1296B0 — SP STE-ELE RIGHT DOOR RIGHT INT COLUMN — 1 — PZ CR1040A0 — DOOR LATCH FOR EL.MECH. LOCKING SYSTEM — 1 — PZ ED1240A0 — TECHNICAL DATA LABEL — 1 — PZ IP1325B0 — POLYSTYRENE CORNER PACKING D20 — 0.650 — PZ IP1385A1 — CORNER POLYSTYRENE PACKING 110X80X2000 — 0.400 — M IP1508A1 — POLYSTYRENE U SHAPED PROFILE 2000X60X60 — 0.800 — M ML1005A0 — DE5 DF0.6 H18 COMPRESSION SPRING — 2 — PZ SL1155A1 — LOCTITE BICOMPONENT SILICON — 14 — ML TB1562A0 — DOOR LATERAL BEAM SP600 — 2 — PZ TB3303A0 — SHOP.PRO STE-ELE FLAG DOOR HANDLE TUBE — 1 — PZ

COMPONENT			SPARE PART		
Code	*Description*	*Image*	*Code*	*Description*	*Components list*
VT1323A	SP STEFANIA 357X364X4 EXTERNAL GLASS		KDR1285A	BL SHOP.PRO STEFANIA EXTER DOOR KIT LEFT	

Code	Description	Qty	UOM
VI1036A0	ST STEEL STRIPED THREAD INSERT M10 FTT/C	1	PZ
VI1220A1	4,2X12 TCB SELF-TAPPIN G SCREW	12	PZ
VI1930A0	5X25 ST. STEEL SCREW CHIP	22	PZ
VI1998A0	ZINC PLATED SCREW 5X30 TCB	2	PZ
VM1059A1	HEAT SHRINK FILM H800	1.200	M
VM1209A0	SHOP.PRO LOCK PIN WASHER	1	PZ
VM1630A0	INTERNAL GLASS PUSHING CAP	4	PZ
VM1630A1	INTERNAL GLASS PUSHING CAP	4	PZ
VM2274A0	GROOVED BUSHING	1	PZ
VM2275A0	SMOOTH BUSHING	1	PZ
VM2456A0	BAKERLUX SHOP.PRO HANDLE END	2	PZ
VM2456A0	BAKERLUX SHOP.PRO HANDLE END	2	PZ
VM2465A0	SP SIDE-OPENIN G DOOR RIGHT LOWER CAP KIT	1	PZ
VM2465A0	SP SIDE-OPENIN G DOOR RIGHT LOWER CAP KIT	1	PZ
VM2466A0	BL SP LEFT LOWER LATERAL DOOR CAP	1	PZ
VM2466A0	BL SP LEFT LOWER LATERAL DOOR CAP	1	PZ

COMPONENT			SPARE PART		
Code	*Description*	*Image*	*Code*	*Description*	*Components list*
VT1323A	SP STEFANIA 357X364X4 EXTERNAL GLASS		KDR1285A	BL SHOP.PRO STEFANIA EXTER DOOR KIT LEFT	

Code	Description	Qty	UOM
VM2467A0	SP SIDE-OPENING DOOR RIGHT UPPER CAP KIT	1	PZ
VM2467A0	SP SIDE-OPENING DOOR RIGHT UPPER CAP KIT	1	PZ
VM2468A0	BL SP LEFT UPPER LATERAL DOOR CAP	1	PZ
VM2468A0	BL SP LEFT UPPER LATERAL DOOR CAP	1	PZ
VM2470A0	SLIDE TO FIX INTERNAL GLASS SHOP.PRO	2	PZ
VM2470A0	SLIDE TO FIX INTERNAL GLASS SHOP.PRO	2	PZ
VM2471A0	BL SP LOWER CLAMP INT LOCK GLASS SLIDER	1	PZ
VM2471A0	BL SP LOWER CLAMP INT LOCK GLASS SLIDER	1	PZ
VM2472A0	BL SP UPPER CLAMP INT LOCK GLASS SLIDER	1	PZ
VM2472A0	BL SP UPPER CLAMP INT LOCK GLASS SLIDER	1	PZ
VM2473A0	BL SP INT GLASS HINGE LOWER LOCK PIN	1	PZ
VM2473A0	BL SP INT GLASS HINGE LOWER LOCK PIN	1	PZ
VM2474A0	BL SP INT GLASS HINGE UPPER LOCK PIN	1	PZ

COMPONENT			SPARE PART		
Code	*Description*	*Image*	*Code*	*Description*	*Components list*
VT1323A	SP STEFANIA 357X364X4 EXTERNAL GLASS		KDR1285A	BL SHOP.PRO STEFANIA EXTER DOOR KIT LEFT	
			KDR1284A	BL SHOP.PRO STEFANIA EXTERNAL DOOR KI	

Components list

Code	Description	Qty	UOM
VM2474A0	BL SP INT GLASS HINGE UPPER LOCK PIN	1	PZ
VM2478A0	BL SP GLASS H4 PUSHING BRACKET	4	PZ
VM2478A0	BL SP GLASS H4 PUSHING BRACKET	4	PZ
VM2489A0	SP HANDLE END KIT + STYLUS KIT	1	PZ
VM2504A0	DOWEL TO GUIDE SLIDE SPRING SHOP.PRO	2	PZ
VM2504A0	DOWEL TO GUIDE SLIDE SPRING SHOP.PRO	2	PZ
VM2527A0	STYLUS PEN FOR SP	1	PZ
VT1323A0	SP STEFANIA 357X364X4 EXTERNAL GLASS	1	PZ
VT1323A0	SP STEFANIA 357X364X4 EXTERNAL GLASS	1	PZ

Components list

Code	Description	Qty	UOM
0B1293A0	SP STE-ELE RIGHT DOOR LEFT EXT COLUMN	1	PZ
0B1294A0	SP STE-ELE RIGHT DOOR LEFT INT COLUMN	1	PZ
0B1295B0	SP STE-ELE RIGHT DOOR RIGHT EXT COLUMN	1	PZ
0B1296B0	SP STE-ELE RIGHT DOOR RIGHT INT COLUMN	1	PZ
CR1040A0	DOOR LATCH FOR EL.MECH. LOCKING SYSTEM	1	PZ
ED1240A0	TECHNICAL DATA LABEL	1	PZ

COMPONENT			SPARE PART		
Code	*Description*	*Image*	*Code*	*Description*	*Components list*
VT1323A	SP STEFANIA 357X364X4 EXTERNAL GLASS		KDR1284A	BL SHOP.PRO STEFANIA EXTERNAL DOOR KI	

Code	Description	Qty	UOM
IP1325B0	POLYSTYRENE CORNER PACKING D20	0.650	PZ
IP1385A1	CORNER POLYSTYRENE PACKING 110X80X2000	0.400	M
IP1508A1	POLYSTYRENE U SHAPED PROFILE 2000X60X60	0.800	M
ML1005A0	DE5 DF0.6 H18 COMPRESSION SPRING	2	PZ
SL1155A1	LOCTITE BICOMPONENT SILICON	14	ML
TB1562A0	DOOR LATERAL BEAM SP600	2	PZ
TB3303A0	SHOP.PRO STE-ELE FLAG DOOR HANDLE TUBE	1	PZ
VI1036A0	ST STEEL STRIPED THREAD INSERT M10 FTT/C	1	PZ
VI1220A1	4,2X12 TCB SELF-TAPPING SCREW	12	PZ
VI1930A0	5X25 ST. STEEL SCREW CHIP	22	PZ
VI1998A0	ZINC PLATED SCREW 5X30 TCB	2	PZ
VM1059A1	HEAT SHRINK FILM H800	1.200	M
VM1209A0	SHOP.PRO LOCK PIN WASHER	1	PZ
VM1630A0	INTERNAL GLASS PUSHING CAP	4	PZ
VM1630A1	INTERNAL GLASS PUSHING CAP	4	PZ
VM2274A0	GROOVED BUSHING	1	PZ
VM2275A0	SMOOTH BUSHING	1	PZ

COMPONENT			SPARE PART		
Code	*Description*	*Image*	*Code*	*Description*	*Components list*
VT1323A	SP STEFANIA 357X364X4 EXTERNAL GLASS		KDR1284A	BL SHOP.PRO STEFANIA EXTERNAL DOOR KI	

Code	Description	Qty	UOM
VM2456A0	BAKERLUX SHOP.PRO HANDLE END	2	PZ
VM2456A0	BAKERLUX SHOP.PRO HANDLE END	2	PZ
VM2465A0	SP SIDE-OPENIN G DOOR RIGHT LOWER CAP KIT	1	PZ
VM2465A0	SP SIDE-OPENIN G DOOR RIGHT LOWER CAP KIT	1	PZ
VM2466A0	BL SP LEFT LOWER LATERAL DOOR CAP	1	PZ
VM2466A0	BL SP LEFT LOWER LATERAL DOOR CAP	1	PZ
VM2467A0	SP SIDE-OPENIN G DOOR RIGHT UPPER CAP KIT	1	PZ
VM2467A0	SP SIDE-OPENIN G DOOR RIGHT UPPER CAP KIT	1	PZ
VM2468A0	BL SP LEFT UPPER LATERAL DOOR CAP	1	PZ
VM2468A0	BL SP LEFT UPPER LATERAL DOOR CAP	1	PZ
VM2470A0	SLIDE TO FIX INTERNAL GLASS SHOP.PRO	2	PZ
VM2470A0	SLIDE TO FIX INTERNAL GLASS SHOP.PRO	2	PZ
VM2471A0	BL SP LOWER CLAMP INT LOCK GLASS SLIDER	1	PZ

COMPONENT			SPARE PART		
Code	*Description*	*Image*	*Code*	*Description*	*Components list*
VT1323A	SP STEFANIA 357X364X4 EXTERNAL GLASS		KDR1284A	BL SHOP.PRO STEFANIA EXTERNAL DOOR KI	

Code	Description	Qty	UOM
VM2471A0	BL SP LOWER CLAMP INT LOCK GLASS SLIDER	1	PZ
VM2472A0	BL SP UPPER CLAMP INT LOCK GLASS SLIDER	1	PZ
VM2472A0	BL SP UPPER CLAMP INT LOCK GLASS SLIDER	1	PZ
VM2473A0	BL SP INT GLASS HINGE LOWER LOCK PIN	1	PZ
VM2473A0	BL SP INT GLASS HINGE LOWER LOCK PIN	1	PZ
VM2474A0	BL SP INT GLASS HINGE UPPER LOCK PIN	1	PZ
VM2474A0	BL SP INT GLASS HINGE UPPER LOCK PIN	1	PZ
VM2478A0	BL SP GLASS H4 PUSHING BRACKET	4	PZ
VM2478A0	BL SP GLASS H4 PUSHING BRACKET	4	PZ
VM2489A0	SP HANDLE END KIT + STYLUS KIT	1	PZ
VM2504A0	DOWEL TO GUIDE SLIDE SPRING SHOP.PRO	2	PZ
VM2504A0	DOWEL TO GUIDE SLIDE SPRING SHOP.PRO	2	PZ
VM2527A0	STYLUS PEN FOR SP	1	PZ
VT1323A0	SP STEFANIA 357X364X4 EXTERNAL GLASS	1	PZ
VT1323A0	SP STEFANIA 357X364X4 EXTERNAL GLASS	1	PZ

COMPONENT			SPARE PART		
Code	*Description*	*Image*	*Code*	*Description*	*Components list*
VT1323A	SP STEFANIA 357X364X4 EXTERNAL GLASS		KDR1280A	BL SHOP.PRO STEFANIA COMPLETE DOOR KIT	

Code	Description	Qty	UOM
0B1285A0		1	PZ
0B1286A0		1	PZ
0B1287A0		1	PZ
0B1288A0		1	PZ
CR1111A0	BLSP STEFANIA DROPDOWN DOOR HINGE	2	PZ
IP1508A1	POLYSTYRENE U SHAPED PROFILE 2000X60X60	1.500	M
LP1050A0	BL SHOP.PRO L180 COMPLETE LED BAR	1	PZ
SL1155A1	LOCTITE BICOMPONENT SILICON	14	ML
TB1562A0	DOOR LATERAL BEAM SP600	1	PZ
TB3301A0		1	PZ
VI1014A0	STAINLESS STEEL WASHER 4.5X9X0.8	1	PZ
VI1220A1	4,2X12 TCB SELF-TAPPING SCREW	10	PZ
VI1875A0	SCREW M5X10 TC1/2T INOX	6	PZ
VI1930A0	5X25 ST. STEEL SCREW CHIP	12	PZ
VI1998A0	ZINC PLATED SCREW 5X30 TCB	2	PZ
VM1059A1	HEAT SHRINK FILM H800	0.500	M
VM1630A0	INTERNAL GLASS PUSHING CAP	1	PZ
VM1630A1	INTERNAL GLASS PUSHING CAP	1	PZ
VM2456A0	BAKERLUX SHOP.PRO HANDLE END	2	PZ
VM2456A0	BAKERLUX SHOP.PRO HANDLE END	2	PZ

COMPONENT			SPARE PART		
Code	*Description*	*Image*	*Code*	*Description*	*Components list*
VT1323A	SP STEFANIA 357X364X4 EXTERNAL GLASS		KDR1280A	BL SHOP.PRO STEFANIA COMPLETE DOOR KIT	

Code	Description	Qty	UOM
VM2461A0	BL SP RIGHT LOWER DROPDOWN DOOR CAP KIT	1	PZ
VM2461A0	BL SP RIGHT LOWER DROPDOWN DOOR CAP KIT	1	PZ
VM2462A0	BL SP LEFT LOWER DROPDOWN DOOR CAP	1	PZ
VM2462A0	BL SP LEFT LOWER DROPDOWN DOOR CAP	1	PZ
VM2463A0	SHOP.PRO RIGHT UPPER CAP DROP DOWN DOOR	1	PZ
VM2463A0	SHOP.PRO RIGHT UPPER CAP DROP DOWN DOOR	1	PZ
VM2464A0	SHOP.PRO LEFT UPPER CAP DROP DOWN DOOR	1	PZ
VM2464A0	SHOP.PRO LEFT UPPER CAP DROP DOWN DOOR	1	PZ
VM2471A0	BL SP LOWER CLAMP INT LOCK GLASS SLIDER	1	PZ
VM2471A0	BL SP LOWER CLAMP INT LOCK GLASS SLIDER	1	PZ
VM2472A0	BL SP UPPER CLAMP INT LOCK GLASS SLIDER	1	PZ
VM2472A0	BL SP UPPER CLAMP INT LOCK GLASS SLIDER	1	PZ
VM2478A0	BL SP GLASS H4 PUSHING BRACKET	1	PZ
VM2478A0	BL SP GLASS H4 PUSHING BRACKET	1	PZ

COMPONENT			SPARE PART		
Code	*Description*	*Image*	*Code*	*Description*	*Components list*
VT1323A	SP STEFANIA 357X364X4 EXTERNAL GLASS		KDR1280A	BL SHOP.PRO STEFANIA COMPLETE DOOR KIT	**Code** / **Description** / **Qty** / **UOM** VM2489A0 — SP HANDLE END KIT + STYLUS KIT — 1 — PZ VM2503A0 — SLIDE TO FIX INTERNAL NON REMOV GLASS SP — 2 — PZ VM2503A0 — SLIDE TO FIX INTERNAL NON REMOV GLASS SP — 2 — PZ VM2512A0 — BL SP DOOR-MICRO SWITCH SOFT CLOSING — 1 — PZ VM2512A0 — BL SP DOOR-MICRO SWITCH SOFT CLOSING — 1 — PZ VM2527A0 — STYLUS PEN FOR SP — 1 — PZ VT1323A0 — SP STEFANIA 357X364X4 EXTERNAL GLASS — 1 — PZ VT1323A0 — SP STEFANIA 357X364X4 EXTERNAL GLASS — 1 — PZ VT1329A0 — SP STEFANIA 515X318.5X4 INNER GLASS — 1 — PZ VT1329A0 — SP STEFANIA 515X318.5X4 INNER GLASS — 1 — PZ
VT1329A	SP STEFANIA 515X318.5X4 INNER GLASS		KVT1329A	BL SP STEFANIA INTERNAL DOOR GLASS KIT	**Code** / **Description** / **Qty** / **UOM** IP1508A1 — POLYSTYRENE U SHAPED PROFILE 2000X60X60 — 0.800 — M VM1059A1 — HEAT SHRINK FILM H800 — 1.200 — M VT1329A0 — SP STEFANIA 515X318.5X4 INNER GLASS — 1 — PZ VT1329A0 — SP STEFANIA 515X318.5X4 INNER GLASS — 1 — PZ

COMPONENT			SPARE PART		
Code	*Description*	*Image*	*Code*	*Description*	*Components list*
TB3301A			KTB3301A	BL SP 460X330 DROPDOWN HANDLE TUBE KIT	

Code	Description	Qty	UOM
TB3301A0		1	PZ
VI1930A0	5X25 ST. STEEL SCREW CHIP	4	PZ
VM2456A0	BAKERLUX SHOP.PRO HANDLE END	2	PZ
VM2456A0	BAKERLUX SHOP.PRO HANDLE END	2	PZ
VM2489A0	SP HANDLE END KIT + STYLUS KIT	1	PZ
VM2527A0	STYLUS PEN FOR SP	1	PZ

VM2456A	BAKERLUX SHOP.PRO HANDLE END		KVM2456A	2 PCS BAKERLUX SHOP.PRO HANDLE END KIT	

Code	Description	Qty	UOM
VI1930A0	5X25 ST. STEEL SCREW CHIP	4	PZ
VM1224A0	65MY 220MM 2 COLOURS SHRINK TUBE	0.300	M
VM2456A0	BAKERLUX SHOP.PRO HANDLE END	2	PZ
VM2456A0	BAKERLUX SHOP.PRO HANDLE END	2	PZ
VM2489A0	SP HANDLE END KIT + STYLUS KIT	1	PZ
VM2527A0	STYLUS PEN FOR SP	1	PZ

PE2105A	BLSP GO COMPLETE CONTROL		KPE2105A	BAKERLUX SP GO CONTROL BOARD KIT	

Code	Description	Qty	UOM
PE2105A0	BAKERLUX SHOP.PRO GO COMPLETE CONTROL	1	PZ
PE2105A1	SHOP PRO GO CONTROL BOARD KIT	1	PZ
PE2105A2	BLSP GO COMPLETE CONTROL	1	PZ
VI1930A0	5X25 ST. STEEL SCREW CHIP	2	PZ
VM2147A0	410X343X15 MM PINK SMOOTH ESD SPONGE	1	PZ

ASM3438A/0.D01 - Electrical system

FRONT

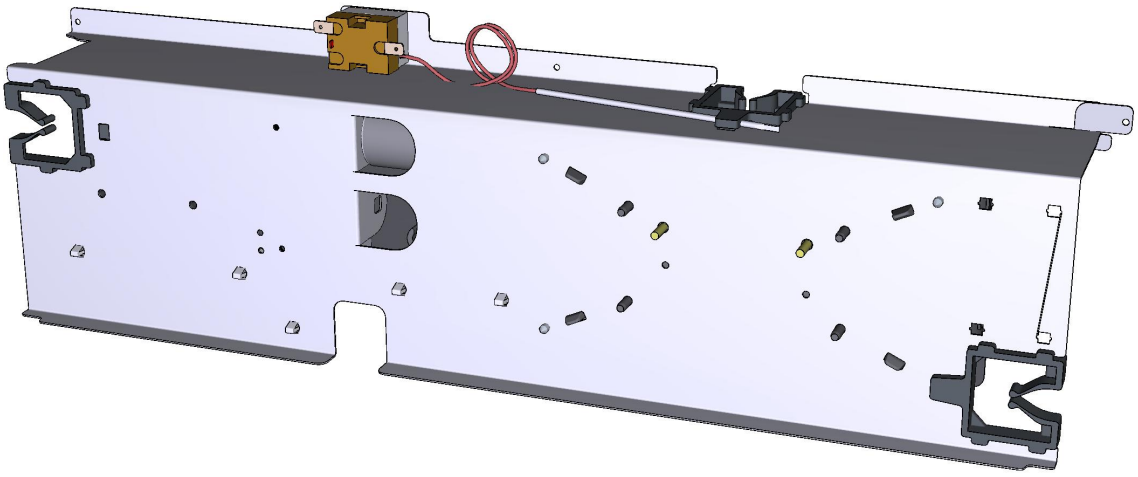

ASM3438A/0.D01 - Electrical system

REAR

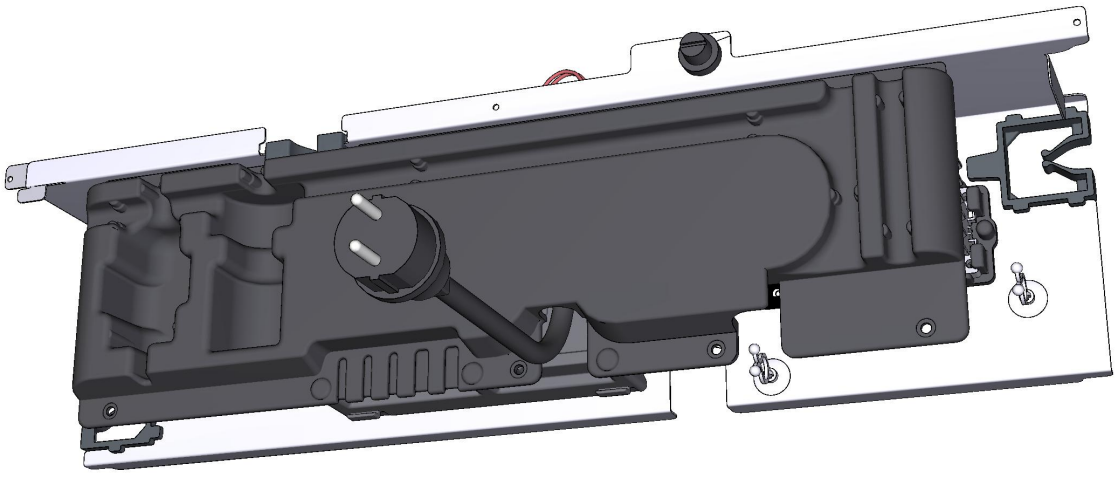

COMPONENT			SPARE PART		
Code	*Description*	*Image*	*Code*	*Description*	*Components list*
TR1136A	330°C 1 POLE SAFETY THERMOSTAT		KTR1136A	330°C SAFETY THERMOSTAT KIT	
CN1003A	6,3 UF MOTOR CAPACITOR	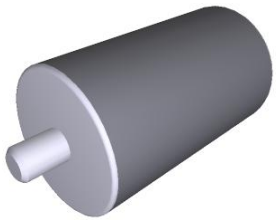	KCN1003A	6,3 UF MOTOR CAPACITOR KIT	
VE1115A	20 A 230V 4 POLES MINICONTACTOR	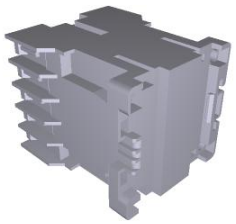	KVE1115A	20A 230V 4 POLES MINICONTACTOR KI	

Code	Description	Qty	UOM
0H7030A0	THERMOSTAT BULB INLET COVER	1	PZ
GN1531A0	THERMOSTAT BULB INLET SEALING	1	PZ
MOV0011A0	HOOD RING GASKET GN1110A2	0.100	PZ
SL1045A0	S57 BLACK SILICONE - 80ML CARTRIDGE	1	PZ
TR1136A0	330°C 1 POLE SAFETY THERMOSTAT	1	PZ
VI1220A1	4,2X12 TCB SELF-TAPPING SCREW	3	PZ

Code	Description	Qty	UOM
CN1003A0	6,3 UF MOTOR CAPACITOR	1	PZ
VI1931A0	M8 NUT+INDENTED WASHER D=8 X COND.	1	PZ
VI1932A0	M8 NUT+INDENTED WASHER D=8 X COND.	1	PZ
VM1224A0	65MY 220MM 2 COLOURS SHRINK TUBE	0.200	M

Code	Description	Qty	UOM
VE1115A0	20 A 230V 4 POLES MINICONTACTOR	1	PZ
VM1075A1	PLASTIC CLIP TO FIX CONTACTORS	4	PZ
VM1224A0	65MY 220MM 2 COLOURS SHRINK TUBE	0.250	M

COMPONENT			SPARE PART		
Code	*Description*	*Image*	*Code*	*Description*	*Components list*
VM1056A	SMALL CONTACTOR BRACKET VE1115A		VM1056A0	SMALL CONTACTOR BRACKET VE1115A	
0P1021A	COMPONENTS HOLDING PANEL STE-ARI SP	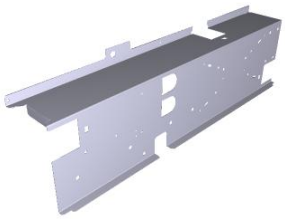	0P1021A0	COMPONENTS HOLDING PANEL STE-ARI SP	
CE1581A	CABLE H07RNF 3G1.5 L1.5MT+K1/6+SCHUKO		KCE1581A	H07RNF 3G1.5 L1.5 MT + SHUKO PLUG KIT	Code / Description / Qty / UOM CE1581A0 — CABLE H07RNF 3G1.5 L1.5MT+K1/6+SCHUKO — 1 — PZ VM1224A0 — 65MY 220MM 2 COLOURS SHRINK TUBE — 0.300 — M
MR1025A	3 POLES 450V 41A+GROUND TERMINAL BLOCK		KMR1025A	3 POLES TERMINAL BLOCK KIT	Code / Description / Qty / UOM MR1025A1 — 3 POLES 450V 41A+GROUND TERMINAL BLOCK — 1 — PZ VM1224A0 — 65MY 220MM 2 COLOURS SHRINK TUBE — 0.150 — M
VI1328A		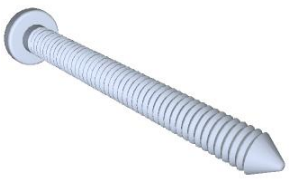	VI1328A0		

COMPONENT			SPARE PART		
Code	*Description*	*Image*	*Code*	*Description*	*Components list*
VM1188A	BL SHOP.PRO POWER BOARD WIRE PASSAGE	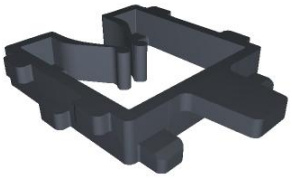	KVM1188A	BL SP POWER BOARD WIRE PASSAGE 10 PC KIT	Code / Description / Qty / UOM VM1188A0 BL SHOP.PRO POWER BOARD WIRE PASSAGE 10 PZ VM1224A0 65MY 220MM 2 COLOURS SHRINK TUBE 0.200 M
VM2484A	ELECTRICAL CONNECTION CABLE CLAMP	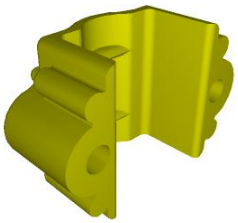	KVM2484A	CABLE LOCKS ELECTRICAL CONNECTION KIT	Code / Description / Qty / UOM VM1224A0 65MY 220MM 2 COLOURS SHRINK TUBE 0.300 M VM2484A0 ELECTRICAL CONNECTION CABLE CLAMP 1 PZ VM2484A0 ELECTRICAL CONNECTION CABLE CLAMP 1 PZ
			KVM2482A	BAKERLUX SP ELECTR COMPONENTS HOLDER KIT	Code / Description / Qty / UOM VM1224A0 65MY 220MM 2 COLOURS SHRINK TUBE 0.300 M VM2482A0 ELECTR COMPONENTS HOLDER FRAME SHOP.PRO 1 PZ VM2482A0 ELECTR COMPONENTS HOLDER FRAME SHOP.PRO 1 PZ VM2484A0 ELECTRICAL CONNECTION CABLE CLAMP 1 PZ VM2484A0 ELECTRICAL CONNECTION CABLE CLAMP 1 PZ
VM1187A	POWER BOARD FRAME SHOP.PRO		VM1187A0	POWER BOARD FRAME SHOP.PRO	

COMPONENT			SPARE PART		
Code	*Description*	*Image*	*Code*	*Description*	*Components list*
PE2100A	BLSP 230V POWER BOARD		KPE2100A	BAKERLUX SP GO 230V POWER BOARD KIT	Code / Description / Qty / UOM PE2100A0 — BL GO 230V POWER BOARD KIT — 1 — PZ PE2100A1 — BLSP 230V POWER BOAR — 1 — PZ PE2100A2 — BLSP GO 230V POWER BOAR — 1 — PZ VI1988A0 — AUTOTHREADING SCREW 4,2X19 TCB+ INOX — 3 — PZ VM1187A0 — POWER BOARD FRAME SHOP.PRO — 1 — PZ VM2147A0 — 410X343X15 MM PINK SMOOTH ESD SPONGE — 1 — PZ
VM2482A	ELECTR COMPONENTS HOLDER FRAME SHOP.PRO	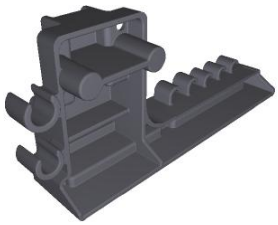	KVM2482A	BAKERLUX SP ELECTR COMPONENTS HOLDER KIT	Code / Description / Qty / UOM VM1224A0 — 65MY 220MM 2 COLOURS SHRINK TUBE — 0.300 — M VM2482A0 — ELECTR COMPONENTS HOLDER FRAME SHOP.PRO — 1 — PZ VM2482A0 — ELECTR COMPONENTS HOLDER FRAME SHOP.PRO — 1 — PZ VM2484A0 — ELECTRICAL CONNECTION CABLE CLAMP — 1 — PZ VM2484A0 — ELECTRICAL CONNECTION CABLE CLAMP — 1 — PZ
VM2483A	SHOP PRO COMPONENTS HOLDER COVER	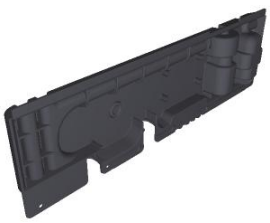	KVM2483A	BL SHOP.PRO COMPONENTS HOLDER COVER KIT	Code / Description / Qty / UOM VM1224A0 — 65MY 220MM 2 COLOURS SHRINK TUBE — 0.300 — M VM2483A0 — COMPONENTS HOLDER COVER SHOP.PRO — 1 — PZ VM2483A0 — COMPONENTS HOLDER COVER SHOP.PRO — 1 — PZ VM2483A1 — SHOP PRO COMPONENTS HOLDER COVER — 1 — PZ

ASM3401A/0.D01 - Cooking chamber

FRONT

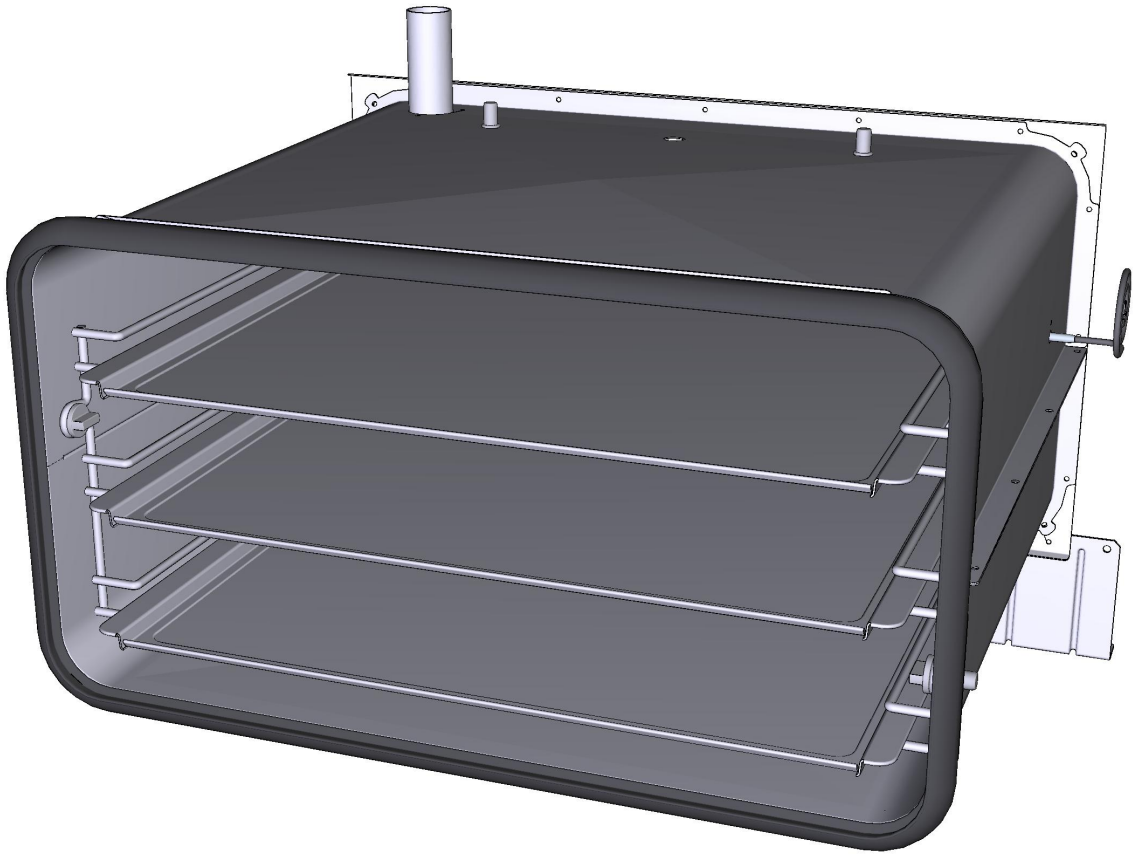

ASM3401A/0.D01 - Cooking chamber

REAR

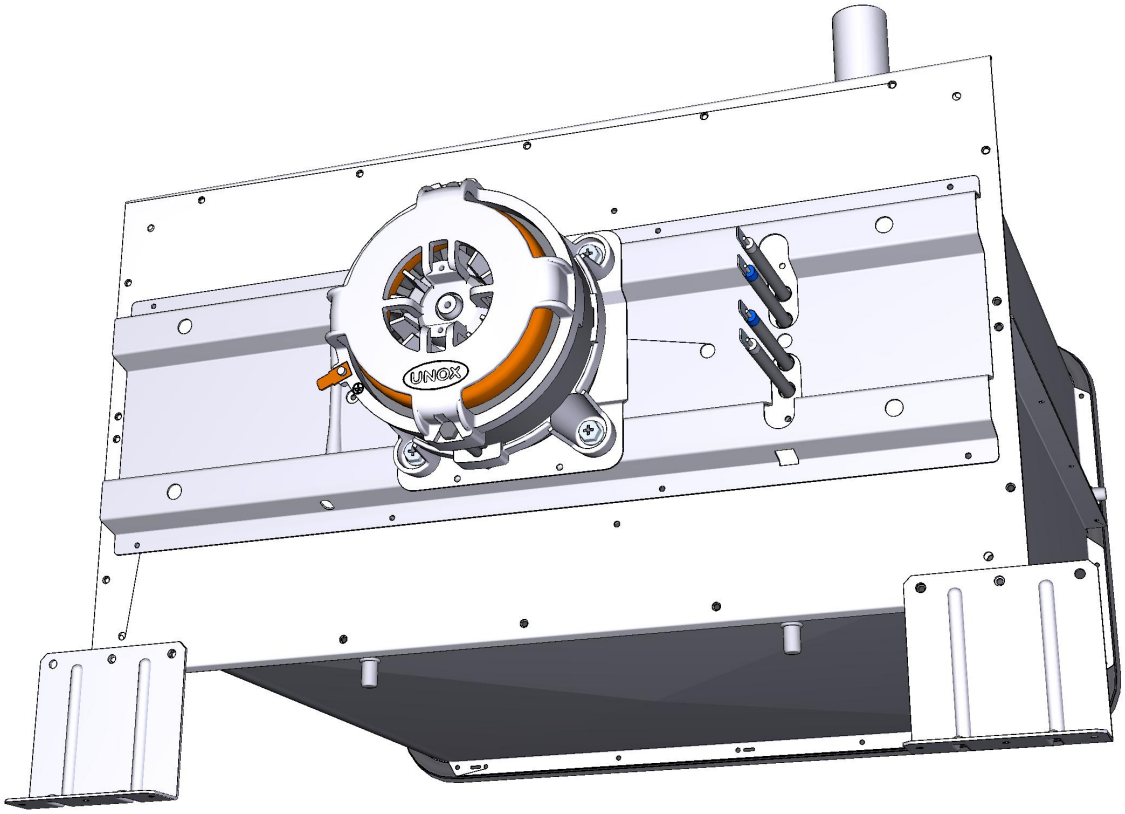

COMPONENT			SPARE PART		
Code	*Description*	*Image*	*Code*	*Description*	*Components list*
TR1105A	L1000 PT100 TEMPERATURE PROBE		KTR1105A	PT100 L1000 TEMPERATURE PROBE KIT	Code / Description / Qty / UOM GN1120A0 NTC TEMPERATURE PROBE SEAL 1 PZ GN1120A1 NTC TEMPERATURE PROBE SEAL 1 PZ GN1285A0 NTC TEMPERATURE PROBE SEALING 1 PZ MOV0010A0 HOOD RING GASKET GN1110A2 0.100 PZ SL1045A0 S57 BLACK SILICONE - 80ML CARTRIDGE 1 PZ TR1105A4 L1000 PT100 TEMPERATURE PROBE 1 PZ VI1220A1 4,2X12 TCB SELF-TAPPING SCREW 2 PZ VM1464A1 CT BT TEMPERATURE PROBE COVER 1 PZ VM1465A1 CT BT TEMPERATURE PROBE COVER 1 PZ VM2052A0 LM CORE PROBE COVE 1 PZ
0H7875A	MUFFLE SUPPORT BRACKET SHOP.PR		0H7875A0	MUFFLE SUPPORT BRACKET SHOP.PR	
0H3020A	MOTOR SHAFT SEALING DISC		0H3020A1	MOTOR SHAFT SEALING DISC	

COMPONENT			SPARE PART		
Code	*Description*	*Image*	*Code*	*Description*	*Components list*
MT1012A	330W 230V MOTOR	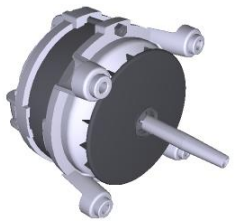	KVN1130A	LUX =08.2017/S.5/S.5E 330W MOTOR KIT	

Code	Description	Qty	UOM
0H4305A1	ST. STEEL MOTOR SHAFT SEALING DISC	1	PZ
GN1140A2	MOTOR HOLDER GASKET	1	PZ
GN1140A3	MOLDED MOTOR HOLDER GASKET	1	PZ
VI1045A0	16X8,4 TH=1,6 ST.STEEL WASHER	1	PZ
VI1256A0	M8 DIN 980M ST. STEEL SELF LOCKING NUT	1	PZ
VM1794A0	250X4.8 PA66 BLACK CLAMP	4	PZ
VM2103A0	CLAMP LOCK	4	PZ
VM2196A0	MOTOR NUT FASTENING BUSHING	1	PZ
VN1130A1	330W 230V 50/60HZ MOTO	1	PZ
VN1130A1	330W 230V 50/60HZ MOTO	1	PZ

KMT1012A	MIND.MAPS 330W 230V MOTOR KIT		

Code	Description	Qty	UOM
0H2842A0	MT1012 CENTERING JI	1	PZ
0H4305A1	ST. STEEL MOTOR SHAFT SEALING DISC	1	PZ
GN1140A2	MOTOR HOLDER GASKET	1	PZ
GN1140A3	MOLDED MOTOR HOLDER GASKET	1	PZ
MOV0007A0	HOOD RING GASKET GN1110A2	0.100	PZ
MT1012A0	330W 230V MOTOR	1	PZ
VE1550A0	5X3 MM NEODYMIUM MAGNET	1	PZ
VI1077A1	SCREW M6X12 TE INOX	1	PZ

COMPONENT			SPARE PART		
Code	*Description*	*Image*	*Code*	*Description*	*Components list*
MT1012A	330W 230V MOTOR	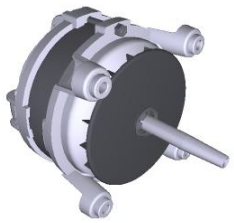	KMT1012A	MIND.MAPS 330W 230V MOTOR KIT	**Code** / **Description** / **Qty** / **UOM** VI1521A0 / STAINLESS STEEL WASHER D=6 6592 / 1 / PZ VI1966A0 / M4X14 FLATHEAD SCREW / 1 / PZ VM1635A0 / MAGNET HOLDING DIS / 1 / PZ VM1794A0 / 250X4.8 PA66 BLACK CLAMP / 4 / PZ VM2103A0 / CLAMP LOCK / 4 / PZ
VN1172A	M8 NUT 8 BLADES H40 D195 FAN	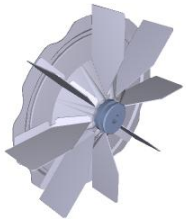	KVN1172A	D195 H40 8 BLADES FAN+NUT M8 KIT	**Code** / **Description** / **Qty** / **UOM** VI1077A1 / SCREW M6X12 TE INOX / 1 / PZ VI1521A0 / STAINLESS STEEL WASHER D=6 6592 / 1 / PZ VN1172A0 / M8 NUT 8 BLADES H40 D195 FAN / 1 / PZ VN1172A0 / M8 NUT 8 BLADES H40 D195 FAN / 1 / PZ
GN1547A	SHAFT GASKET D11.8		KGN1547A	D11.6 MOTOR SHAFT GASKET 3PCS KIT	**Code** / **Description** / **Qty** / **UOM** GN1547A1 / SHAFT GASKET D11.8 / 3 / PZ VM1224A0 / 65MY 220MM 2 COLOURS SHRINK TUBE / 0.200 / M
0H7170A	MM MOTOR GLASS WOOL PLATE		0H7170A0	MM MOTOR GLASS WOOL PLATE	

COMPONENT			SPARE PART		
Code	*Description*	*Image*	*Code*	*Description*	*Components list*
RS1282A	2700W 230V+210W 160V 4TURNS H60 ELEMENT		KRS1282A	4TURN HEAT ELEM 2700W 230V+210W 160V KIT	Code / Description / Qty / UOM GN1327A0 HEATING ELEMENT GASKET 1 PZ RS1282A0 2700W 230V+210W 160V 4TURNS H60 ELEMENT 1 PZ SL1045A0 S57 BLACK SILICONE - 80ML CARTRIDGE 1 PZ VI1220A1 4,2X12 TCB SELF-TAPPING SCREW 1 PZ VM1794A0 250X4.8 PA66 BLACK CLAMP 2 PZ VM2103A0 CLAMP LOCK 2 PZ
TB1574A	FUME CHIMNEY D30 SHOP PRO		TB1574A0	FUME CHIMNEY D30 SHOP PRO	
0G1671A	STEFANIA SHOP PRO GO FAN GUAR		0G1671A0	STEFANIA SHOP PRO GO FAN GUAR	
GN1596A	GN1110A - SHOP.PRO STEFANIA DOOR GASKET	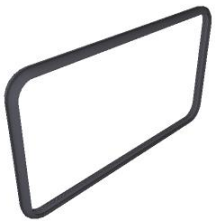	KGN1596A	BL SHOP.PRO STEFANIA DOOR GASKET KIT	Code / Description / Qty / UOM GN1110A2 LINE MISS/XVC105-055/XK/XL DOOR GASKE 1.500 M VM1224A0 65MY 220MM 2 COLOURS SHRINK TUBE 0.350 M

COMPONENT			SPARE PART		
Code	*Description*	*Image*	*Code*	*Description*	*Components list*
0G1651B	STEFANIA SP FAN GUARD		0G1651B0	STEFANIA SP FAN GUARD	
VM1815A	LATERAL SUPPORTS FIXING BOLT	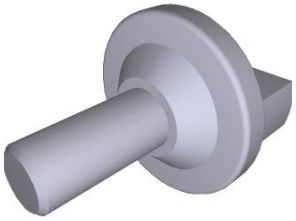	KVM1815A	MISS/MICRO/S4/S3 THUMB SCREW 10 PCS KIT	Code / Description / Qty / UOM VM1224A0 / 65MY 220MM 2 COLOURS SHRINK TUBE / 0.200 / M VM1815A0 / LATERAL SUPPORTS FIXING BOLT / 10 / PZ
ATG305	TRAY 460X330 FLAT ALUMINIUM	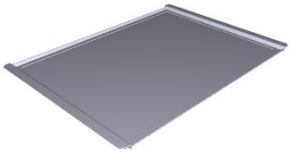	ATG3050	TRAY 460X330 FLAT ALUMINIUM	
GRL1005A	LINEMISS STEFANIA RIGHT/LEFT LAT. GRID		KGRL1005A	R/L CHROM. PLATED LATERAL SUPP KIT	Code / Description / Qty / UOM GRL1005A2 / LINEMISS STEFANIA RIGHT/LEFT LAT. GRID / 2 / PZ IP1508A1 / POLYSTYRENE U SHAPED PROFILE 2000X60X60 / 2 / M VM1059A1 / HEAT SHRINK FILM H800 / 1.500 / M
TB1577B	STEFANIA SP INTERNAL HUMIDITY PIPE		TB1577B0	STEFANIA SP INTERNAL HUMIDITY PIPE	

ASM3407A/0.D01 - External cover

FRONT

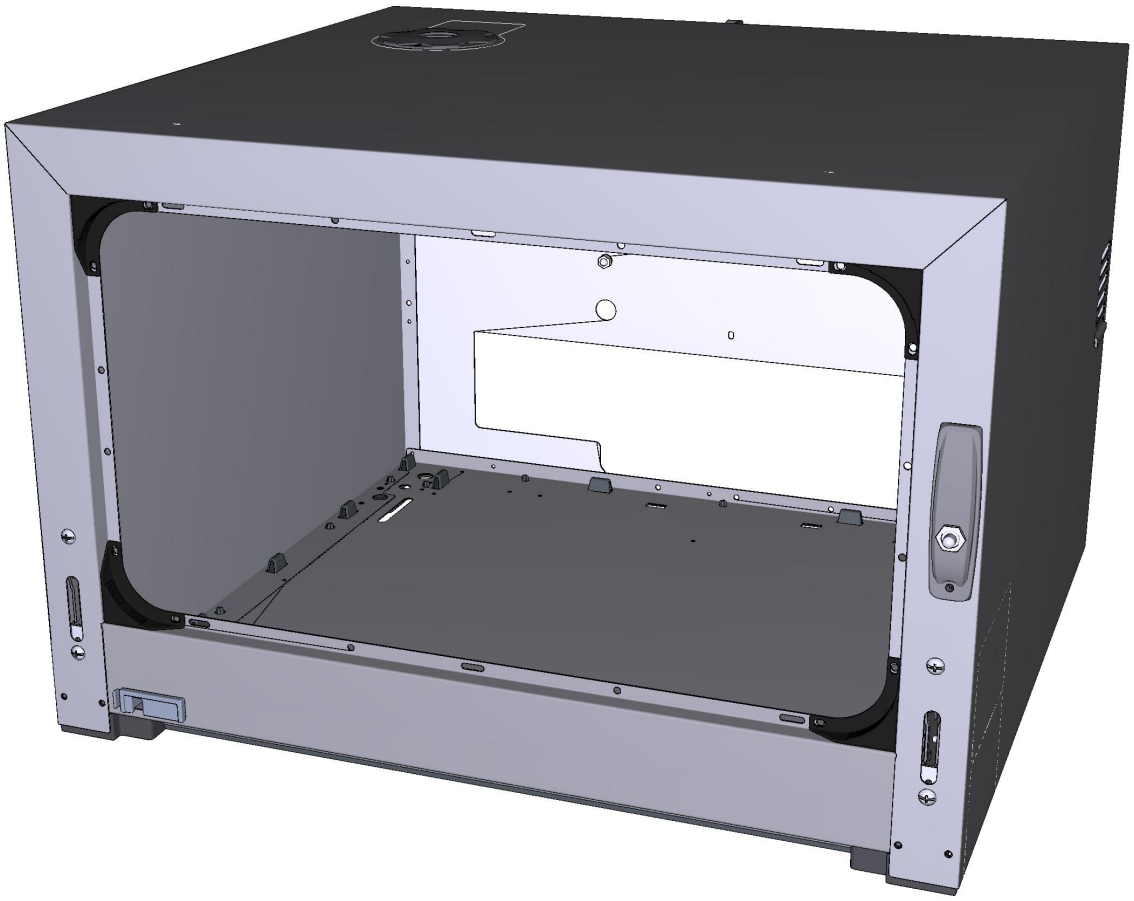

ASM3407A/0.D01 - External cover

REAR



ASM3407A/0.D01 External cover

COMPONENT			SPARE PART		
Code	*Description*	*Image*	*Code*	*Description*	*Components list*
VM1750A	BRASS COMB CLAM		KVM1750A	COMB TERMINAL BLOCK KIT	Code / Description / Qty / UOM VM1224A0 — 65MY 220MM 2 COLOURS SHRINK TUBE — 0.150 — M VM1750A0 — BRASS COMB CLAMP — 1 — PZ
CR1000A	HINGE LATCH L.M.		KCR1000A	LM HINGES LATCH KIT	Code / Description / Qty / UOM CR1000A0 — HINGE LATCH L.M. — 1 — PZ VI1875A0 — SCREW M5X10 TC1/2T INOX — 2 — PZ VM1224A0 — 65MY 220MM 2 COLOURS SHRINK TUBE — 0.200 — M
VM2249A	COOKING CHAMBER FRONT CORNER		KVM2249A	CHAMBER FRONT PROFILE CORNER KIT	Code / Description / Qty / UOM VM1224A0 — 65MY 220MM 2 COLOURS SHRINK TUBE — 0.150 — M VM2249A0 — COOKING CHAMBER FRONT CORNER — 1 — PZ
0D2409A	SP600 INF FRONT PROFILE DROP DOWN DOOR		0D2409A0	SP600 INF FRONT PROFILE DROP DOWN DOOR	
0E1381A	SP600 EXTERNAL BOTTOM PANEL	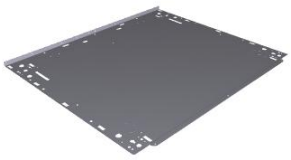	0E1381A0	SP600 EXTERNAL BOTTOM PANEL	

COMPONENT			SPARE PART		
Code	*Description*	*Image*	*Code*	*Description*	*Components list*
VM2502A	BAKERLUX SHOP.PRO CHIMNEY RING		KVM2502A	BAKERLUX SHOP.PRO CHIMNEY RING KIT	Code / Description / Qty / UOM VM1224A0 — 65MY 220MM 2 COLOURS SHRINK TUBE — 0.300 — M VM2502A0 — BAKERLUX SHOP.PRO CHIMNEY RIN — 1 — PZ VM2502A0 — BAKERLUX SHOP.PRO CHIMNEY RIN — 1 — PZ
VE1295A	MK 16A 230V DOOR MICROSWITCH		KVE1295A	16A 230V DOOR MICROSWITCH KIT	Code / Description / Qty / UOM VE1295A0 — MK 16A 230V DOOR MICROSWITC — 1 — PZ VM1224A0 — 65MY 220MM 2 COLOURS SHRINK TUBE — 0.300 — M
VM2508A	BAKERLUX SHOP.PRO DOOR SWITCH COVER		KVM2508A	BAKERLUX SHOP.PRO MICROSWITCH COVER KIT	Code / Description / Qty / UOM VM1224A0 — 65MY 220MM 2 COLOURS SHRINK TUBE — 0.300 — M VM2508A0 — BAKERLUX SHOP.PRO DOOR SWITCH COVE — 1 — PZ VM2508A0 — BAKERLUX SHOP.PRO DOOR SWITCH COVE — 1 — PZ
VM2481A	FRONT EXTERNAL COVER LEFT CAP S		KVM2481A	BL SP LEFT EXT COVER FRONT PANEL CAP KIT	Code / Description / Qty / UOM VM1224A0 — 65MY 220MM 2 COLOURS SHRINK TUBE — 0.150 — M VM2481A0 — FRONT EXTERNAL COVER LEFT CAP SP — 1 — PZ VM2481A0 — FRONT EXTERNAL COVER LEFT CAP SP — 1 — PZ

COMPONENT			SPARE PART		
Code	*Description*	*Image*	*Code*	*Description*	*Components list*
VM2480A	FRONT EXTERNAL COVER RIGHT CAP SP		KVM2480A	BL SP RIGHT EXT COVER FRONT PANEL CAP	Code / Description / Qty / UOM VM1224A0 — 65MY 220MM 2 COLOURS SHRINK TUBE — 0.150 — M VM2480A0 — FRONT EXTERNAL COVER RIGHT CAP SP — 1 — PZ VM2480A0 — FRONT EXTERNAL COVER RIGHT CAP SP — 1 — PZ
VM1631A	PLUS INNER GLASS PUSHING CAP		KVM1631A	CAP FOR INTERNAL GLASS 10 PCS KIT	Code / Description / Qty / UOM VM1224A0 — 65MY 220MM 2 COLOURS SHRINK TUBE — 0.200 — M VM1631A0 — PLUS INNER GLASS PUSHING CAP — 10 — PZ
VM2490A	460X330 SP EXT FRONT BOTTOM GASKET		KVM2490A	SP 460X330 EXT BOTTOM PANEL GASKET KIT	Code / Description / Qty / UOM VM1794A0 — 250X4.8 PA66 BLACK CLAMP — 1 — PZ VM2103A0 — CLAMP LOCK — 1 — PZ VM2490A0 — 460X330 SP EXT FRONT BOTTOM GASKET — 2 — PZ VM2490A0 — 460X330 SP EXT FRONT BOTTOM GASKET — 2 — PZ
VM2491A	460X330 BL SP LATER BOTTOM PANEL GASKET		KVM2491A	SP 460X330 LAT BOTT PANEL GASKET 2PC KIT	Code / Description / Qty / UOM VM1631A0 — PLUS INNER GLASS PUSHING CAP — 4 — PZ VM1794A0 — 250X4.8 PA66 BLACK CLAMP — 1 — PZ VM2103A0 — CLAMP LOCK — 1 — PZ VM2491A0 — 460X330 BL SP LATER BOTTOM PANEL GASKE — 2 — PZ VM2491A0 — 460X330 BL SP LATER BOTTOM PANEL GASKE — 2 — PZ VM2491A1 — SP600 LATERAL BOTTOM PANEL GASKE — 2 — PZ

ASM3407A/0.D01 External cover

COMPONENT			SPARE PART		
Code	*Description*	*Image*	*Code*	*Description*	*Components list*
VM1222A	CABLE LOCKS SP ACCESSORIES EL CONNECTION		VM1222A0	CABLE LOCKS SP ACCESSORIES EL CONNECTION	
VM2455A	BL SP CONTROL BOARD CABLE PASSAGE CLIP	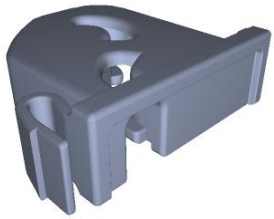	KVM2455A	BL SP CONTR BOARD PASSAGE CABLE CLIP KIT	Code / Description / Qty / UOM VM1224A0 / 65MY 220MM 2 COLOURS SHRINK TUBE / 0.150 / M VM2455A0 / BL SP CONTROL BOARD CABLE PASSAGE CLI / 1 / PZ VM2455A0 / BL SP CONTROL BOARD CABLE PASSAGE CLI / 1 / PZ
VN1175A	230V 50/60HZ 120X120 COOLING DOWN FAN		KVN1175A	120X120 230V 50/60HZ COOLING FAN KIT	Code / Description / Qty / UOM VN1175A0 / 230V 50/60HZ 120X120 COOLING DOWN FAN / 1 / PZ VN1175A0 / 230V 50/60HZ 120X120 COOLING DOWN FAN / 1 / PZ
VM2495A	SP COOLING FAN SUPPORT		KVM2495A	COOLING FAN SUPPORT KIT	Code / Description / Qty / UOM VI1220A1 / 4,2X12 TCB SELF-TAPPING SCREW / 2 / PZ VM2495A0 / SP COOLING FAN SUPPORT / 1 / PZ
0D2401B			0D2401B0		

ASM3407A/0.D01 External cover

COMPONENT			SPARE PART		
Code	*Description*	*Image*	*Code*	*Description*	*Components list*
0F1541B	STEFANIA SP BACK PANEL		0F1541B0	STEFANIA SP BACK PANEL	