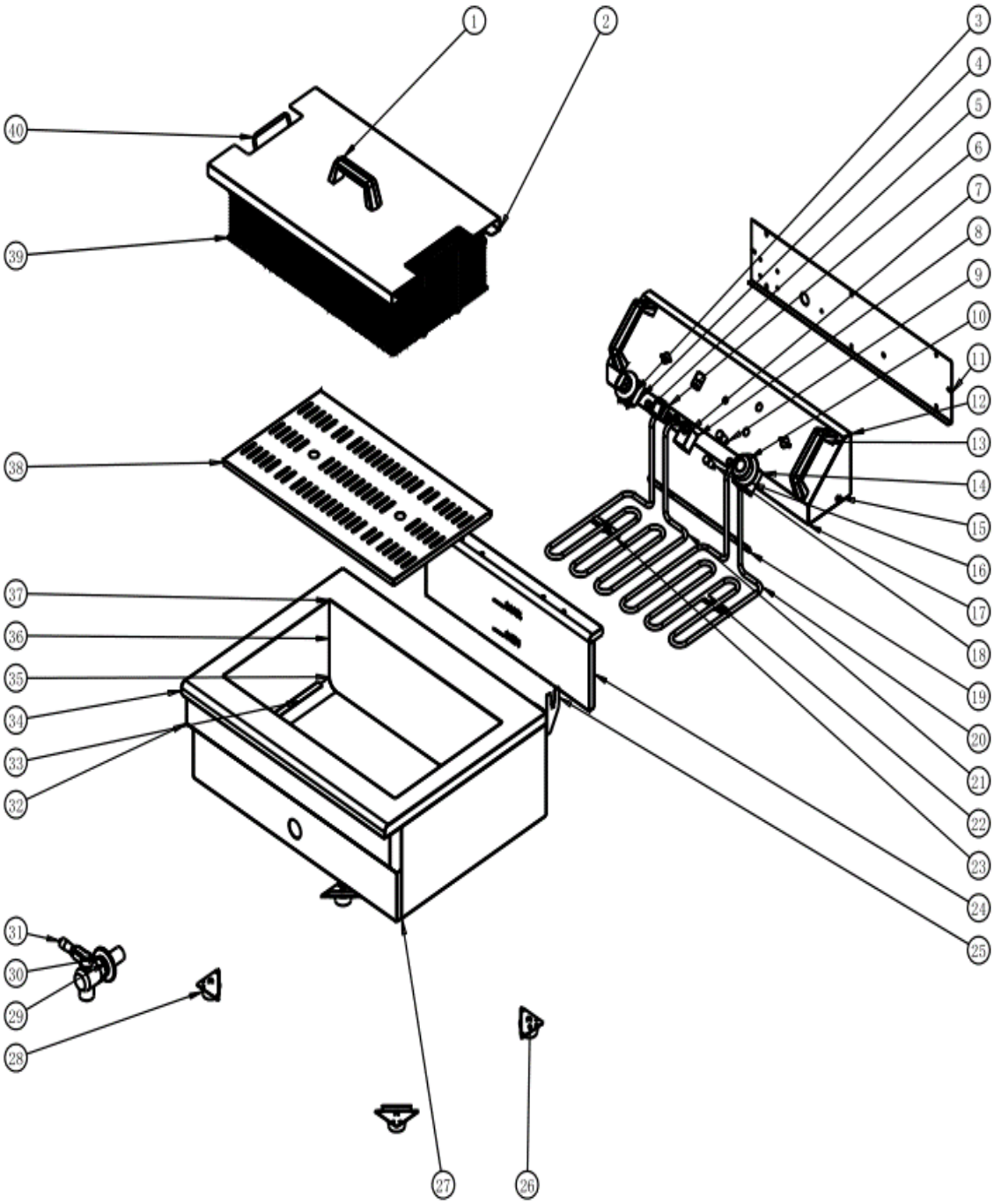
1
2
3
4
5
6
7
8
9
10
11
12
13
14
15
16
17
18
19
20
21
22
23
24
25
26
27
28
29
30
31
32
33
34
35
36
37
38
39
40

Item No.	Description
1	Fryer cover handle
2	Fryer cover
3	Timer Knob
6	Switch
7	Temperature Control Cover
8	Temperature Limiter
9	Power Light
10	Temperature Knob
13	Fryer handle
14	Temperature Control
16	Temperature Indicator Plate
18	Working Light
20/21	Heating Tube
26	Pad
31	Valve
38	Drainer
39	S/S Fry Basket