

ELETTRICO
ELECTRIC
ELECTRIQUE
ELEKTRISCHE
ELECTRICO

GAS
GASBACK
GAZ

CON FORNO
WITH OVEN
AVEC FOUR
MIT OFEN
CON HORNO

CON ARMADIO
WITH CABINET
AVEC CABINET
MIT SCHRANK
CON GABINETE

Apach

APTG-47PL (R)

The information and images above are considered not binding. The manufacturer reserves the right to make changes at any time without notice.

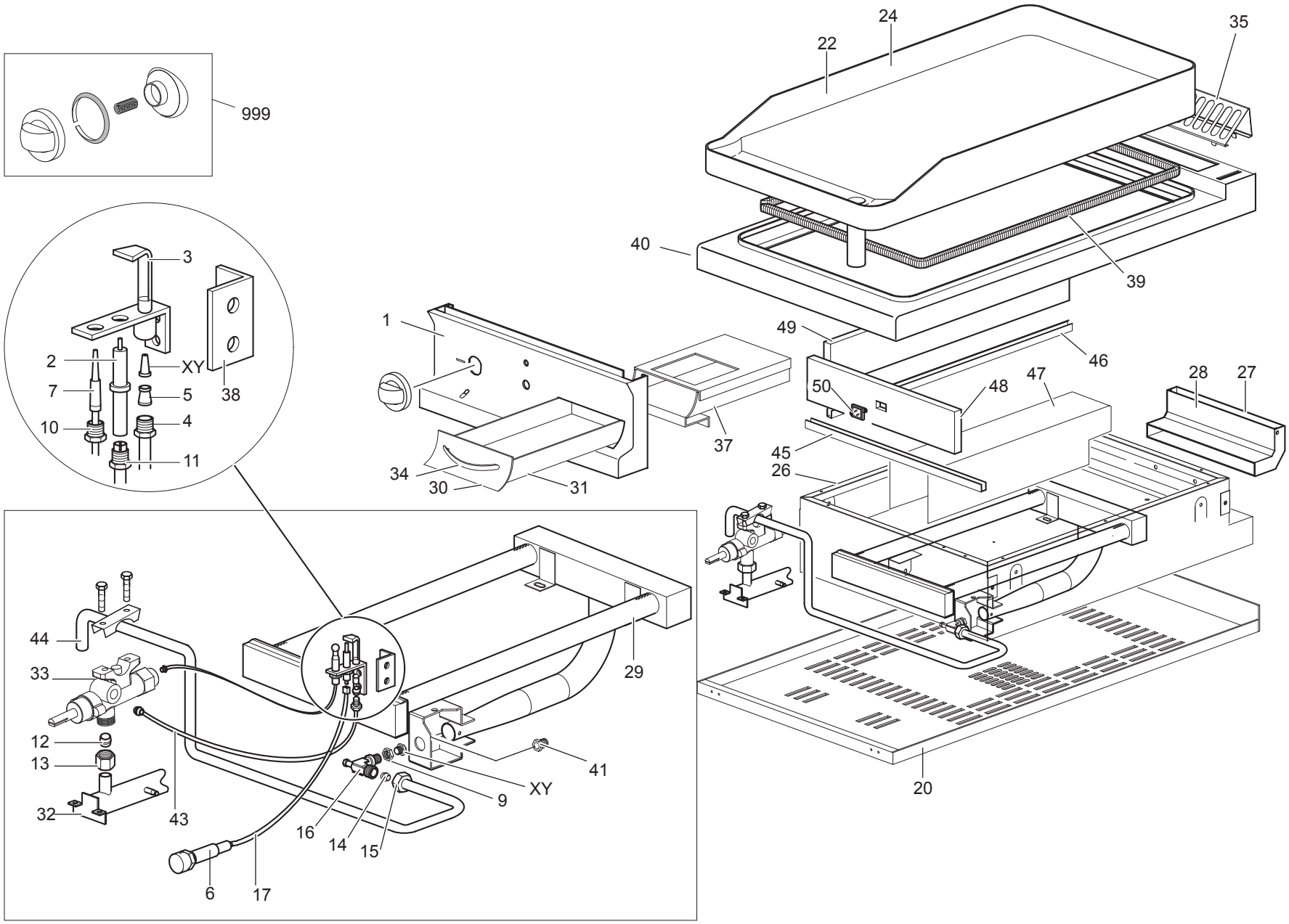

APACH APTG-47PL (R)

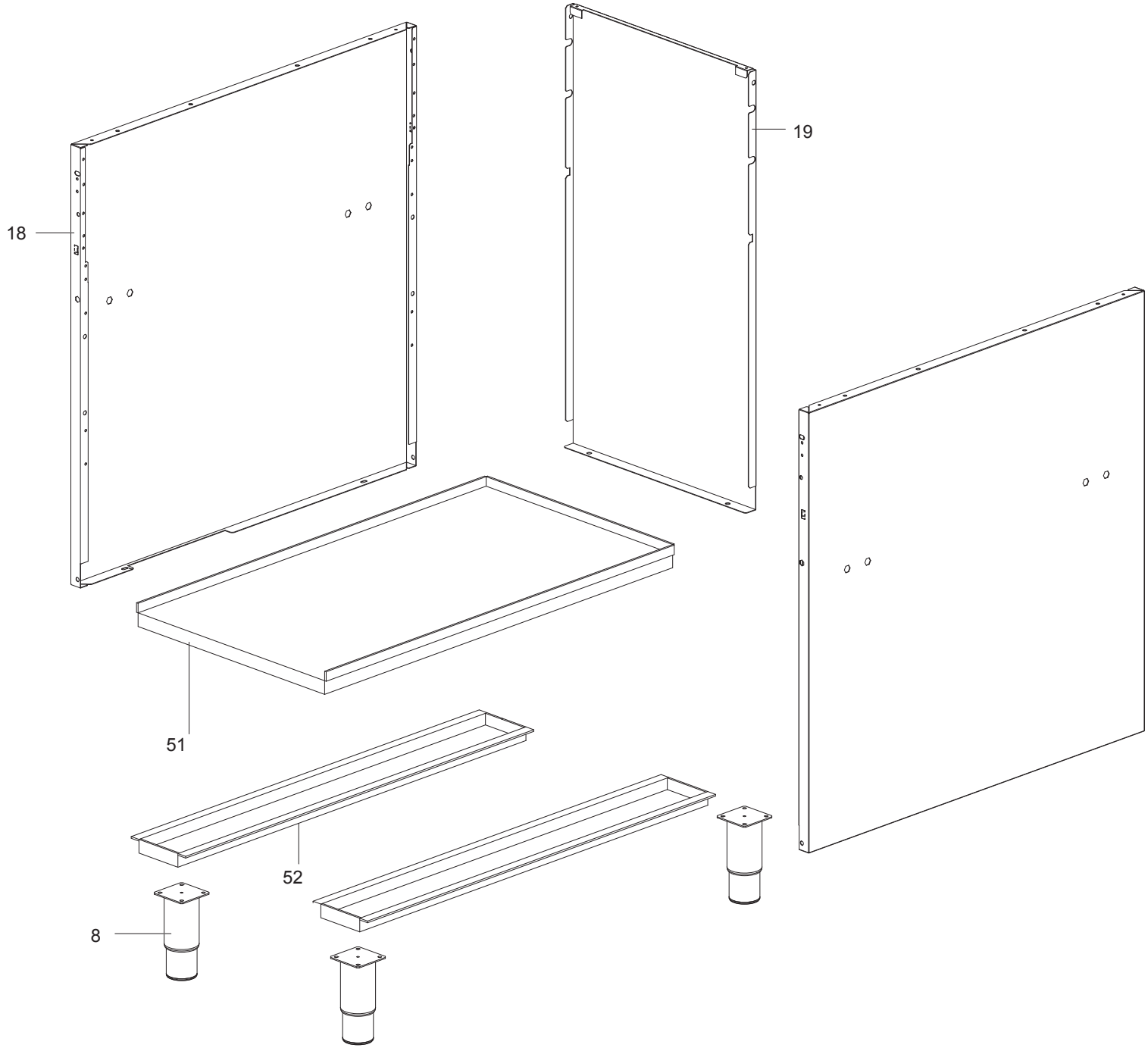

APACH APTG-47PL (R)

APTG-47PL-PR

= Ricambi consigliati - Recommended spare parts

TAVOLA	POS.	CODICE	ITALIANO	FRANCESE	INGLESE	TEDESCO
TAV.700-106/109	1	174992	AS.CRUSCOTTO GFT49	PANNEAU DE CONTRÔLE	CONTROL PANEL	STIRNBRETT
TAV.700-106/109	2	RTCP800033	CANDELETTA G100	ELECTRODE ALLUMAGE	SPARK PLUG	ZÜNDKERZE
TAV.700-106/109	3	RTCP800034	CORPO PILOTA	VEILLEUSE	PILOT	PILOTBRENNER
TAV.700-106/109	4	RTCU800182	CALOTTA D.6	ECROU D.6	NUT D.6	MUTTER D.6
TAV.700-106/109	5	RTCU800183	BICONO D.6	BICONE D.6	BICONE D.6	ZWEIKEGEL D.6
TAV.700-106/109	6	RIC0004096	ACCENSIONE PIEZO	ALLUMAGE PIEZO	PIEZO LIGHTING	PIEZOELEKTRISCHER ANZÜNDER
TAV.700-106/109	7	RTCU700296	T/COPPIA	THERMOCOUPLE	THERMOCOUPLE	THERMOELEMENT
TAV.700-106/109	8	RTCU700277	PIEDINO	PIED	FOOT	FUSS
TAV.700-106/109	9	RTCU900005	C/DADO	C/ECROU	C/NUT	C/MUTTER
TAV.700-106/109	10	RTCP800038	RACCORDO T/C	ÉCROU POUR THERMOCOUPLE	NUT FOR THERMOELEMENT	THERMOELEMENTANSCHLUSS
TAV.700-106/109	11	RTCU900215	RACCORDO CAND.	RACCORD POUR BOUGIE VEILLEUSE	FITTING FOR PILOT SPARK PLUG	ANSCHLUSSTÜCK
TAV.700-106/109	12	RTCU900018	BICONO D.6	BICONE D.6	BICONE D.6	ZWEIKEGEL D.6
TAV.700-106/109	13	RTCU900019	CALOTTA D.6	ECROU D.6	NUT D.6	MUTTER D.6
TAV.700-106/109	14	RTCU900012	BICONO D.10	BICONE D.10	BICONE D.10	ZWEIKEGEL D.10
TAV.700-106/109	15	RTCU900013	CALOTTA D.10	ECROU D.10	NUT D.10	MUTTER D.10
TAV.700-106/109	16	RTCU900337	SUPPORTO INIETTORE	SUPPORT INJECTEUR	INJECTOR SUPPORT	EINSPRITZHALTERUNG
TAV.700-106/109	17	RTCU900384	CAVO ACCENSIONE	CABLE D'ALLUMAGE	LIGHTING CABLE	ZÜNDKABEL
TAV.700-106/109	18	173523	FIANCO	CÔTÉ	SIDE	SEITE
TAV.700-106/109	19	167248	POSTERIORE INOX	PANNEAU POSTÉRIEURE INOX	INOX BACK PANEL	INOX RÜCKWAND
TAV.700-106/109	20	169185	FONDO TOP	FOND TOP	BOTTOM TOP	UNTERE EBENE TOP
TAV.700-106/109	22	180118	PIANO COTT. LISCIO	PLAN DE CUISSON LISSE	FLAT COOKING PLANE	GLATTE KOCHFLÄCHE
TAV.700-106/109	24	180120	PIANO COTT. RIGATO	PLAQUE DE CUISSON RAYÉER	RIFLED FRY-PLATE	GERILLTE GRILLPLATTE
TAV.700-106/109	26	167268	CAMERA COMBUSTIONE	CHAMBRE DE COMBUSTION	COMBUSTION CHAMBER	BRENNERKAMMER
TAV.700-106/109	27	167269	PARETE POSTERIORE CAM.INT.	PAROI DERRIÈRE	REAR WALL	RÜCKWAND
TAV.700-106/109	28	167270	PARETE ANTERIORE CAM.INT.	PAROI ANTÉRIEUR	FRONT WALL	WAND FRÜHER
TAV.700-106/109	29	RTCU700744	BRUCIATORE	BRÛLEUR	BURNER	BRENNER
TAV.700-106/109	30	174999	PANNELLO CASSETTO OLIO	PANNEAU TIROIR HUILE	OIL TRAY PANEL	TAFEL ÖLKASTEN
TAV.700-106/109	31	163122	CASSETTO OLIO	TIROIR HUILE	OIL TRAY	ÖLKASTEN
TAV.700-106/109	32	169186	RAMPA GBM49	COLLECTEUR GBM49	COLLECTOR GBM49	SPEISERAMPE GBM49
TAV.700-106/109	33	168005	TERMOSTATO GAS	THERMOSTAT GAZ	GAS THERMOSTAT	GAS THERMOSTAT
TAV.700-106/109	34	160270	MANIGLIA GFT49	POINGÉE GFT49	HANDLE GFT49	HANDGRIFF GFT49
TAV.700-106/109	35	167732	GRIGLIA CAM.G2S77	GRILLE POUR CHEMINÉE	CHIMNEY GRILL	SCHORNSTEINROST
TAV.700-106/109	37	180453+180454	GUIDA INF. E SUP.CASSETTO OLIO	RAIL POUR LA CUVE HUILE	OIL TANK SLIDE WAY	ÖLBECKENFÜHRUNG
TAV.700-106/109	38	170259	SQUADRETTA PILOTA	EGUERRE POUR VILLEUSE	BRACKET TO SUPPORT PILOT	PILOTBRENNERHALTEWINKEL
TAV.700-106/109	39	163290	ISOLANTE TRECCIA	GARNITURE	JOINT	ISOLIERPROFIL
TAV.700-106/109	40	174703+174785	AS.PLACCA G/EFT477 +CAMINETTO SUP.	PLAN INOX	INOX PLANE	INOX EBENE
TAV.700-106/109	41	RTCU700584	REGOLATORE ARIA	RÉGULATEUR AIR	AIR REGULATOR	LUFTREGLER
TAV.700-106/109	43	173410	TUBO PILOTA	TUBE VEILLEUSE	PILOT PIPE	PILOTBRENNERROHR
TAV.700-106/109	44	173409	TUBO ALIMENTAZIONE	TUBE ALIMENTATION DISTIBUTOR	DISTRIBUTOR FEEDING PIPE	HAHNVERSORGUNGSROHR
TAV.700-106/109	45	PACU700515	GUIDA GUARN.ANT.	SUPPORT	SUPPORT	HALTERUNG
TAV.700-106/109	46	PACU700516	GUIDA GUARN.LAT.	SUPPORT	SUPPORT	HALTERUNG
TAV.700-106/109	47	PACU701195	CONV.CALORE	CONVECTION THERMIQUE	CONVECTION HEAT	KONVEKTIONSWÄRME
TAV.700-106/109	48	RTCU700417	PANNELLO IS.ANT.C	PANNEAU ISOLANT	INSULATING PANEL	ISOLIERTAFEL
TAV.700-106/109	49	RTCU700416	PANNELLO IS.LAT.C.	PANNEAU ISOLANT	INSULATING PANEL	ISOLIERTAFEL

TAV.700-106/109	50	RTBF900054	VISORE+VET+2GUARN.	JUDAS	SPY-HOLE	MONITOR
TAV.700-106/109	51	167324	PI.INF.INOX	PLAN INFERIEUR	LOWER PLAN	UNTERE EBENE
TAV.700-106/109	52	166557	TRA.P/PIEDINI	TRAVERSE	CROSSBAR	QUERTRAGER
TAV.700-106/109	XY	VEDI MANUALE UGELLI	INIETTORE	INJECTEUR VEILLEUSE	PILOT INJECTOR	PILOTBRENNEREINSPRITZE
TAV.700-106/109	999	179345+182251+169045+169129	CORPO MAN. TERM.+ANELLO+MOLLA+GHIERA	BOUTON DU THERMOSTAT+ANNEAU	THERMOSTAT KNOB+RING	THERMOSTATKUGELGRIFF+RING
TAV.700-106/109	999	179345+182259+169045+169129	VERSIONE GAS CROMATA	BOUTON DU THERMOSTAT+ANNEAU	THERMOSTAT KNOB+RING	THERMOSTATKUGELGRIFF+RING